ELECTRICAL SYMBOL LEGEND

SYMBOL	GENERAL
1	NOTE REFERENCE NUMBER.
ELECT ROOM 101	TYPICAL ROOM NAME AND NUMBER FOR COMMON SPACES.
1 E-500	INDICATES DETAIL NUMBER DETAIL REFERENCE BUBBLE INDICATES SHEET ON WHICH DETAIL IS LOCATED
LIGHTING	
A	LUMINAIRE TYPE, SEE LUMINAIRE SCHEDULE ON DRAWING E-700.
	LIGHT EMITTING DIODE (LED) LIGHTING FIXTURE. INDICATES BRACKET, WALL MOUNTED FIXTURES).
	LED LIGHTING FIXTURE (INDICATES BRACKET, WALL MOUNTED FIXTURES).
	EMERGENCY LED LIGHTING FIXTURE (INDICATES BRACKET, WALL MOUNTED FIXTURES).
	LED EXIT LIGHTING FIXTURE. ARROW, WHEN USED, INDICATES DIRECTION. (INDICATES BRACKET, WALL MOUNTED FIXTURES). FILLED IN QUADRANT(s) OF SYMBOL INDICATES NUMBER AND ORIENTATION OF ILLUMINATED FACES. CONNECT EXIT LIGHT FIXTURE AHEAD OF LOCAL CONTROL.
S	SINGLE POLE SWITCH.
S3	THREE-WAY SWITCH
SOS	WALL MOUNT OCCUPANCY SENSOR SWITCH
SK	KEYED SWITCH.
ST	SINGLE-POLE TIMER SWITCH WITH 2 MINUTE FLICKER WARNING PRIOR TO TURN OFF. ADJUSTABLE FROM 1 MINUTE TO 18 HOURS. NSI INDUSTRIES #SS20F.
SS	TWO-SINGLE POLE SWITCHES FOR DUAL LEVEL LIGHTING CONTROL. SEE PLANS FOR SWITCHING ARRANGEMENT.
S3S3	TWO THREE-WAY SWITCHES, FOR DUAL LEVEL LIGHTING CONTROL. SEE PLANS FOR SWITCHING ARRANGEMENT.
OS	CEILING MOUNTED OCCUPANCY SENSOR. SENSORS SHALL BE WIRED IN PARALLEL IN AREAS CONTAINING MULTIPLE SENSORS. SUBSCRIPTS, WHEN USED, INDICATE THE FOLLOWING: (BLANK) = DUAL TECHNOLOGY (INFRARED AND ULTRA-SONIC) PI = VACANCY SENSOR, PASSIVE INFRARED V = VACANCY SENSOR, DUAL TECHNOLOGY
DS	CEILING MOUNTED DAYLIGHT HARVESTING CONTROL SENSOR
PC	PHOTOCELL
LC	LIGHTING CONTACTOR FOR CONTROL OF EXTERIOR LIGHTING AND SIGN LIGHTING. SEE DETAIL 1 ON DRAWING E-700.
TC	TIMECLOCK. SEE DETAIL 1 ON DRAWING E-700.
POWER DEVICES	
	WHEN USED: WP = WEATHERPROOF RECEPTACLE. RECEPTACLE SHALL BE LISTED WEATHER-RESISTANT TYPE AND PROVIDED WITH WHILE-IN-USE EXTRA DUTY RATED COVER.
	SINGLE RECEPTACLE, 20A, 125 VAC, MOUNT AT 18" AFF, UON.
	WALL MOUNTED DUPLEX CONVENIENCE RECEPTACLE, 20A, 125 VAC. MOUNT AT 18" AFF, UON.
	WALL MOUNTED DUPLEX CONVENIENCE RECEPTACLE WITH INTEGRAL GROUND FAULT PROTECTION, 20A, 125 VAC. MOUNT AT 18" AFF, UON.
	WALL MOUNTED DOUBLE DUPLEX CONVENIENCE RECEPTACLE, 20A, 125 VAC, MOUNT AT 18" AFF, UON.
	WALL MOUNTED SPECIAL PURPOSE RECEPTACLE. DESCRIPTION AS INDICATED ON PLANS, MOUNT AT 18" AFF, UON.
EVC	ELECTRIC VEHICLE CHARGER, 208V, 2-POLE, DUAL CONNECTOR PEDESTALS. PROVIDE WITH INTERNAL GROUND FAULT AND SURGE PROTECTION. ASSEMBLY SHALL BE SUITABLE FOR OUTDOOR INSTALLATION (NEMA 3R). PROVIDE WITH CELLULAR COMMUNICATION POWERCHARGE NETWORKED COMERCIAL ELECTRIC VEHICLE CHARGER, MODEL #P20-DPN. OR APPROVED EQUAL. DUAL STATION REQUIRES TWO FEEDS.
EVC F	ELECTRIC VEHICLE CHARGER FUTURE CONNECTION. PROVIDE TWO WEATHER PROOF JUNCTION BOXES, MOUNT SIDE BY SIDE AT 10" AFF. EXTEND 3/4" CONDUITS FROM EACH JUNCTION BOX TO PANEL 1NL1 SECTION II, PROVIDE PULL STRING, BLANK COVER PLATE AND LABEL FOR "FUTURE ELECTRIC VEHICLE CHARGER".
DISTRIBUTION	
	PANELBOARD - 480Y/277V 3 PH, 4W. DASHED OUTLINE INDICATED REQUIRED WORKING SPACE CLEARANCE. SEE POWER RISER AND PANELBOARD SCHEDULES FOR SPECIFICS. MOUNTING HEIGHT SHALL BE 72" TO TOP OF PANELBOARD CAN. MOUNTING HEIGHTS SHALL BE CONSISTENT THROUGHOUT BUILDING.
	PANELBOARD - 208Y/120V 3 PH, 4W. DASHED OUTLINE INDICATED REQUIRED WORKING SPACE CLEARANCE. SEE POWER RISER AND PANELBOARD SCHEDULES FOR SPECIFICS. MOUNTING HEIGHT SHALL BE 72" TO TOP OF PANELBOARD CAN. MOUNTING HEIGHTS SHALL BE CONSISTENT THROUGHOUT BUILDING.
XFMR	PAD MOUNTED DRY-TYPE TRANSFORMER, U.O.N. 480 VOLT PRIMARY, 208Y/120V SECONDARY. KVA RATING AS INDICATED ON PLANS.
M	METER.
SPD	SURGE PROTECTIVE DEVICE.
	GROUNDING ELECTRODE SYSTEM. SEE DETAIL 1 ON DRAWING E-500.
MGB	GROUND BUSBAR FOR CONNECTION TO BUIDLING GROUNDING ELECTRODE SYSTEM. MOUNT 18" AFF TO TOP. SEE DETAIL 6 ON DRAWING E-500 FOR CONFIGURATION REQUIREMENTS.
	GROUND TEST WELL. SEE DETAIL 3 ON DRAWING E-500.
	CONNECTION TO GROUNDING ELECTRODE. SEE DETAILS 1 AND 2 DRAWING E-500.

SYMBOL	SECURITY
C	CEILING MOUNTED SECURITY CAMERA . AXIS P3375-VE. PROVIDE WITH PENDANT MOUNTING KIT AND CONDUIT REQUIRED TO LOCATE CAMERA LENS TO INVERTED TEES HEIGHT OF DECK STRUCTURE. REFER TO DETAIL 10, DRAWING E-500.
WIRING, CONDUIT AND RACEWAY	
	BRANCH CIRCUIT OR FEEDER WIRING IN CONDUIT RUN CONCEALED IN PARKING GARAGE STRUCTURE. REFER TO SPECIFICATIONS FOR CONDUIT TYPE REQUIRED. REFER TO PANEL SCHEDULES FOR CONDUIT AND WIRE SIZES, U.O.N.
CKT	HOMERUNS TO PANEL. PANEL AND BRANCH CIRCUIT AS INDICATED. SUFFIXES, WHEN USED: (SC)- SPLIT CIRCUIT. CIRCUIT HAS MULTIPLE HOMERUN DESIGNATIONS. THE ELECTRICAL CONTRACTOR SHALL INSTALL ONLY ONE CONDUCTOR PER CIRCUIT BREAKER POLE. SPLICES NECESSARY TO COMPLY WITH THIS REQUIREMENT SHALL BE MADE IN A SEPARATE SPLICE BOX OUTSIDE THE PANELBOARD ENCLOSURE.
MISCELLANEOUS TELECOMMUNICATIONS EQUIPMENT	
TMGB	GROUND BUSBAR MOUNTED 18" AFF MEASURED TO TOP. SEE DETAIL 5 ON DRAWING E-500 FOR CONFIGURATION REQUIREMENTS.
SGB	GROUND BUSBAR MOUNTED 18" AFF MEASURED TO TOP. SAME AS TMGB EXCEPT 1/4" x 4" x 12". REFER TO DETAIL 5 ON DRAWING E-500 FOR CONFIGURATION REQUIREMENTS.
	3/4" NON-FIRE RATED PLYWOOD HORIZONTALLY COVERED. PLYWOOD SHALL BE VOID FREE AND FINISHED ON ONE SIDE, MOUNTED 4 INCHES ABOVE FINISH FLOOR AROUND THE TOTAL PERIMETER OF THE ROOM. THE NON-FIRE RATED PLYWOOD HAS AT LEAST TWO COATS OF FIRE RESISTANT WHITE PAINT. PAINT TO BE APPLIED ON ALL SIX SIDES WITH A MINIMUM OF TWO COATS. THE PLYWOOD SHALL BE MOUNTED AT EIGHT (8) FEET HIGH AND FOUR (4) FEET WIDE AROUND THE ENTIRE TELECOMMUNICATIONS ROOM. PROVIDE SUFFICIENT QUANTITY OF PLYWOOD TO COVER ALL WALLS OF THE TELECOM ROOM COMPLETELY AS INDICATED ON DETAIL 3 DRAWING E-101. CUT TO FIT ROOM PERIMETER AS REQUIRED.
PARKING ASSIST SYSTEM	
POSU E	SURFACE CEILING MOUNTED POWER SUPPLY FOR PARKING MANAGEMENT SYSTEM WITH EQUIPMENT POWER CONNECTION AS NOTED ON PLANS. PRORIDE (1) 1-1/4" EMPTY CONDUIT HOMERUN DOWN TO PARKING MANAGEMENT SYSTEM SERVER IN TELECOM ROOM. POWER SUPPLY, SYSTEM COMPONENTS AND COMMUNICATION CABLING BY OTHERS.
EQUIPMENT CONNECTIONS	
E	EQUIPMENT CONNECTION. SEE EQUIPMENT CONNECTION SCHEDULE ON DRAWING E-700 FOR CONNECTION REQUIREMENTS.
J J J	STANDARD SIZE WALL OR CEILING MOUNTED JUNCTION BOX, UNLESS OTHERWISE NOTED.
NEMA 3R, L — 3P 30 NF	UNFUSED DISCONNECT SWITCH. RATINGS AND CHARACTISTICS AS INDICATED ON EQUIPMENT SCHEDULE. WHEN USED: NEMA 3R= NEMA 3R ENCLOSURE REQUIRED L = PERMANENT PROVISIONS FOR LOCKING DISCONNECT IN OPEN POSITION. 3P = NUMBER OR POLES 30 = DEVICE RATING NF = NON-FUSED
NEMA 3R, L — 3P 30 20	FUSED DISCONNECT SWITCH. RATINGS AND CHARACTISTICS AS INDICATED ON EQUIPMENT SCHEDULE. WHEN USED: NEMA 3R= NEMA 3R ENCLOSURE REQUIRED L = PERMANENT PROVISIONS FOR LOCKING DISCONNECT IN OPEN POSITION. 3P = NUMBER OR POLES 30 = DEVICE RATING 20 = FUSE RATING, OR "FPN" = FUSE PER NAMEPLATE
L	DISCONNECT SWITCH PROVIDED WITH EQUIPMENT. NEMA 1 ENCLOSURE FOR INDOOR INSTALLATIONS, AND NEMA 3R ENCLOSURE FOR EXTERIOR INSTALLATIONS.
STS	THERMAL SWITCH. HORSE POWER RATED.

SYMBOL	TELECOM DEVICE OUTLETS
	TELECOMMUNICATIONS SCOPE NOTES: 1. FURNISH AND INSTALL ALL TELECOM NETWORK EQUIPMENT, JACKS, FACEPLATES, PATCH PANELS, CABLING, CABLE TERMINATIONS, AND PERFORM TESTING. TELECOMMUNICATIONS CABINET'S UPS WILL BE PROVIDED BY UNCW-IT. 2. INFRASTRUCTURE INCLUDING JUNCTION BOXES, BLANK PLATES, CONDUIT RACEWAY, CONDUIT BUSHINGS, EQUIPMENT GROUND BARS, AND OTHER COMPONENTS OF THE TELECOMMUNICATIONS PATHWAY SYSTEM SHALL BE FURNISHED AND INSTALLED BY THE CONTRACTOR.
	DATA OUTLET BOX, MOUNTED 1'-6" AFF, UON. PROVIDE TWO-GANG, 2-1/8" DEEP x 4-11/16" BOX AND GASKETED STAINLESS STEEL COVERPLATE WITH 1" CONDUIT FROM OUTLET LOCATION SHOWN TO TELECOM ROOM.
	VOICE OUTLET BOX, MOUNTED 1'-6" AFF, UON.. PROVIDE TWO-GANG, 2-1/2" DEEP x 4-11/16" SQUARE BOX AND GASKETED STAINLESS STEEL COVERPLATE WITH 1" CONDUIT FROM OUTLET LOCATION SHOWN TO TELECOM ROOM.
E	EMERGENCY PHONE. INSTALL WALL MOUNTED EMERGENCY UNIT AT LOCATIONS INDICATED ON DRAWINGS SO THAT PUSH BUTTON IS 46" ABOVE FINISHED FLOOR. UNIT SHALL BE FED FROM BOTTOM. COORDINATE SYSTEM CONNECTION WITH EQUIPMENT MANUFACTURER. TEST AND VERIFY SYSTEM OPERATION PER MANUFACTURER'S RECOMMENDATIONS. PROVIDE COMPLETE WALL MOUNT CALL 24 WIRELESS CALL BOX SYSTEM INCLUDING STROBE AND DECALS. CALL BOX - MODEL C24-10A-MU-UHF AC MARK III WIRELESS. STROBE/LOCATOR LIGHT - MODEL C24-000-568, T-MOUNT - FLAT SURFACE DECAL, BOX FRONT 10" - C24-000-080. DECAL, SIDE ASSISTANCE C24-000-092. PHONE SUPPLIER SHALL PROVIDE SET-UP, PROGRAMMING AND TESTING TO INTERFACE WITH EXISTING UNCW C24 TEMPLATE. MOUNT STROBE / LOCATOR LIGHT ABOVE CALLBOX AT 96" AFF TO THE CENTER.
SITE	
EXISTING: T / PROVIDE: T T-P	UTILITY PADMOUNTED TRANSFORMER, T-P INDICATES BUILDING TRANSFORMER IS FEEDING.
S S SW	UTILITY PADMOUNTED SWITCH
E E	ELECTRICAL HANDHOLE. REFER TO HANDHOLE DETAIL DRAWING ES501.
C C	TELECOMMUNICATIONS HANDHOLE.
E — E	UNDERGROUND ELECTRICAL BRANCH CIRCUIT. PROVIDE 1-1" PVC CONDUIT, UON. INSTALL 30" BELOW GRADE.
MV	UNDERGROUND MEDIUM VOLTAGE ELECTRICAL CABLE BY UTILITY COMPANY.
UE	UNDERGROUND ELECTRICAL DUCTBANK. REFER TO DUCTBANK DETAIL DRAWING ES501.
UT	UNDERGROUND TELECOMMUNICATIONS DUCTBANK. REFER TO DUCTBANK DETAIL DRAWING ES501.
UL	UNDERGROUND LIGHTING DUCTBANK. PROVIDE 1-1-1/2" PVC CONDUIT, UON. INSTALL 30" BELOW GRADE.
E B	POLE MOUNTED PARKING DECK LIGHTING FIXTURE. SUBSCRIPT "E" INDICATES FIXTURE IS CONNECTED TO EMERGENCY CIRCUIT. SUBSCRIPT INDICATES FIXTURE TYPE. SEE LUMINAIRE SCHEDULE ON DRAWING E-700.
P	POLE MOUNTED SITE LIGHTING FIXTURE. SUBSCRIPT INDICATES FIXTURE TYPE. SEE LUMINARE SCHEDULE ON DRAWING E-700 AND POLE DETAILS DRAWING ES502.
	DUCTBANK DETAIL. REFER TO DRAWING ES501 FOR DUCTBANK CONFIGURATION AND TYPICAL DETAIL AND TO DRAWING ES101 FOR DUCTBANK CONDUIT SCHEDULE.
	POINT OF CONNECTION NEW-TO-EXISTING. PROVIDE MATERIAL AND LABOR REQUIRED TO MAKE CONNECTION.
ET	EXISTING RELOCATED EMERGENCY TELEPHONE. REFER TO DETAIL 6/ES501 FOR BASE, CONDUIT AND OTHER REQUIREMENTS.

GENERAL NOTES

1. DRAWINGS ARE DIAGRAMMATIC AND INDICATE THE GENERAL ARRANGEMENT OF DEVICES ONLY.
2. TERMINALS/LUGS SHALL BE 60/75 DEGREE RATED.
3. LIGHT SWITCHES SHALL BE MOUNTED A MINIMUM OF 6" FROM EDGE OF DOOR FRAME, MAXIMUM OF 12". FOR EXCEPTIONS, CONTACT ARCHITECT PRIOR TO INSTALLATION.
4. WHERE A HOMERUN IS SHOWN, THE CIRCUIT SHALL BE INSTALLED IN A DEDICATED RACEWAY (DO NOT COMBINE WITH OTHER CIRCUITS). WHERE A CIRCUIT-HOMERUN IS NOT SHOWN, COMBINE CIRCUITS IN ACCORDANCE WITH THE NEC AS FOLLOWS:
   - SINGLE PHASE CIRCUITS SHALL HAVE A DEDICATED NEUTRAL.
   - A MAXIMUM OF THREE 20A, 1-POLE BRANCH CIRCUITS MAY BE COMBINED IN A COMMON HOMERUN FOR A TOTAL OF SIX CURRENT CARRYING CONDUCTORS IN A SINGLE RACEWAY. SHARING NEUTRAL NOT ALLOWED.
   - BRANCH CIRCUITS LARGER THAN 20A SHALL BE SEPARATELY HOMERUN TO PANEL.
5. CONDUCTORS FOR BRANCH CIRCUITS SHALL BE SIZED TO PREVENT VOLTAGE DROP EXCEEDING 3% AT THE FARTHEST POINT.
6. EXTERIOR UNDERGROUND ELECTRICAL BRANCH CIRCUITS SHALL UTILIZE MINIMUM CONDUCTOR SIZE #10 AWG AND MINIMUM CONDUIT SIZE 1" UNLESS OTHERWISE NOTED.
7. THE UPPER CASE SUFFIX "SC" AFTER A BRANCH CIRCUIT HOMERUN DESIGNATION INDICATES A "SPLIT CIRCUIT" WHICH MEANS THE HOMERUN ORIGINATES FROM MULTIPLE LOCATIONS. INSTALL ONLY ONE CONDUCTOR PER CIRCUIT BREAKER POLE. SPLICES NECESSARY TO COMPLY WITH THIS REQUIREMENT SHALL BE MADE IN A SEPARATE SPLICE BOX OUTSIDE THE PANELBOARD ENCLOSURE.
8. PROVIDE HOUSEKEEPING PADS FOR INDOOR FLOOR MOUNTED EQUIPMENT.
9. TELECOM OUTLET RACEWAYS SHALL BE FITTED WITH PLASTIC BUSHINGS AT EACH END BEFORE ANY CABLING IS INSTALLED.
10. UNLESS OTHERWISE NOTED ON THE ELECTRICAL CONTRACT DRAWINGS OR SPECIFICATIONS, MOUNTING HEIGHTS SHALL BE AS NOTED ON ARCHITECTURAL PLANS.
11. WHEN SHOWN ADJACENT TO ELECTRICAL DEVICES THE FOLLOWING SUBSCRIPTS SHALL BE DEFINED AS FOLLOWS:
    WP = WEATHERPROOF
    +72" = MOUNTING HEIGHT IN INCHES MEASURED TO TOP OF DEVICE, UON.
12. CONDUITS SHALL CONTAIN A GREEN COLORED EQUIPMENT GROUNDING CONDUCTOR PROVIDING CONTINUITY TO BOXES, DEVICES AND LUMINAIRES.
13. AT STAIRS AND ELEVATOR TOWERS RUN CONDUITS BELOW SLAB AND FROM BOTTOM UP AND DO NOT CROSS EXPANSION JOINTS AT SUPPORTED TIERS, UNLESS OTHERWISE NOTED. DO NOT ROUTE VERTICAL CONDUIT RISERS THROUGH EXPANSION JOINTS.
14. PROVIDE CONDUIT EXPANSION FITTINGS FOR CONDUITS THAT CROSS EXPANSION JOINT AT LOCATIONS REQUIRED.
15. DO NOT ENCASE CONDUIT IN SLAB ON GRADE. INSTALL CONDUIT BELOW SLAB ON GRADE AND GRADE BEAMS.
16. PROVIDE HOT DIPPED GALVANIZED STEEL GUARDS AROUND JUNCTION BOXES, CONDUITS AND OTHER EQUIPMENT WHICH MAY BE EXPOSED TO POSSIBLE BUMPER DAMAGE.
17. FERROUS RACEWAYS, BOXES, CABINETS, ELBOWS, COUPLINGS, FITTINGS, SUPPORTS, AND SUPPORT HARDWARE SHALL BE OF MATERIAL SUITABLE FOR THE ENVIRONMENT IN WHICH THEY ARE TO BE INSTALLED, AND SHALL BE SUITABLY PROTECTED AGAINST CORROSION BY CORROISION-RESISTANT MATERIAL IN COMPLIANCE WITH NEC AND SPECIFICATION SECTION 260533.
18. SURFACE MOUNTED BOXES, RACEWAYS, AND FITTINGS SHALL BE MOUNTED SO THAT THERE IS AT LEAST A 1/4 INCH AIRSPACE BETWEEN IT AND THE CONCRETE WALL OR CEILING.

PERFORMANCE REQUIREMENTS

A. SEISMIC-RESTRAINT LOADING:
1. SITE CLASS AS DEFINED IN THE IBC: AS INDICATED ON STRUCTURAL DRAWINGS.
2. ASSIGNED SEISMIC USE GROUP OR BUILDING CATEGORY AS DEFINED IN THE IBC: AS INDICATED ON STRUCTURAL DRAWINGS.
   A. COMPONENT IMPORTANCE FACTOR: IN ACCORDANCE WITH ASCE7.
   B. COMPONENT RESPONSE MODIFICATION FACTOR: IN ACCORDANCE WITH ASCE7.
   C. COMPONENT AMPLIFICATION FACTOR: IN ACCORDANCE WITH ASCE7.
3. DESIGN SPECTRAL RESPONSE ACCELERATION AT SHORT PERIODS (0.2 SECOND): 0.228G
4. DESIGN SPECTRAL RESPONSE ACCELERATION AT 1.0-SECOND PERIOD: 0.144G

B. LIFE SAFETY SYSTEM:
1. LIFE-SAFETY LIGHTING, EMERGENCY LIGHTING PANELBOARD AND BATTERY INVERTER, A COMPONENT IMPORTANCE FACTOR OF 1.5 SHALL BE ASSIGNED. NON-LIFE-SAFETY SYSTEMS WILL BE ASSIGNED AN IP OF 1.0.

C. LIGHT POLES:
1. BASED ON AASHTO LTS-5 SPECIFICATION AND ASCE 7-05, THE WIND SPEED IN WILMINGTON, NC IS 131 MPH.

REFER TO SPECIFICATION SECTION 012300 AND DRAWING G001 FOR PROJECT ALTERNATES

ABBREVIATIONS

A	AMPERE	KVA	KILOVOLT AMPERE
AF	AMPERE FRAME	LTG	LIGHTING
AFF	ABOVE FINISHED FLOOR	MC	METAL CLAD CABLE
AFG	ABOVE FINISHED GRADE	MCA	MINIMUM CIRCUIT AMPACITY
AT	AMPERE TRIP	MCB	MAIN CIRCUIT BREAKER
ATL	ACROSS THE LINE	MGMT	MANAGEMENT
ATS	AUTOMATIC TRANSFER SWITCH	MLO	MAIN LUG ONLY
AWG	AMERICAN WIRE GAUGE	MOCP	MAXIMUM OVERCURRENT PROTECTION
BG	BELOW GRADE	MSB	MAIN SWITCHBOARD
BK/BD	BACKBOARD	MT	MOUNT
BLDG	BUILDING	MTD	MOUNTED
BRKR	BREAKER	MTG	MOUNTING
B.S.	BUSSED SPACE	MV	MEDIUM VOLTAGE
C	CONDUIT	NAS	NON-AUTOMATIC SWITCH
CATV	CABLE TELEVISION	NEC	NATIONAL ELECTRICAL CODE
CB	CIRCUIT BREAKER	NEU	NEUTRAL
CD	CANDELA	NF	NON-FUSED
CKT	CIRCUIT	NO	NORMALLY OPEN
CLG	CEILING	OC	ON CENTER
CORR	CORRIDOR	P	POLE
CTLR	CONTROLLER	PB	PULL BOX
dBA	DECIBELS ADJUSTED	PH	PHASE
DISC	DISCONNECT	PNL	PANEL
DIST.	DISTRIBUTION	PSI	POUNDS PER SQUARE INCH
DWG	DRAWING	PVC	POLY VINYL CHLORIDE
EB	ELECTRONIC BALLAST	QTY	QUANTITY
EC	EMPTY CONDUIT	RECEPT	RECEPTACLE
ECB	ENCLOSED CIRCUIT BREAKER	REQ'D	REQUIRED
E.F.	EACH FACE	RMC	RIGID METAL CONDUIT
ELEV.	ELEVATOR	SC	SPLIT CIRCUIT
EMER.	EMERGENCY	SCO	STATE CONSTRUCTION OFFICE
EMT	ELECTRICAL METALLIC TUBING	SF	SUPPLY FAN
EQ.	EQUAL	SGB	SECURITY ROOM GROUND BAR
EQUIP	EQUIPMENT	S/N	SOLID NEUTRAL
E.W.	EACH WAY	SPD	SURGE PROTECTION DEVICE
FACU	FIRE ALARM CONTROL UNIT	STD	STANDARD
FLA	FULL LOAD AMPS	SW	SWITCH
FLUOR	FLUORESCENT	SWBD	SWITCHBOARD
FTC	FIRE TERMINAL CABINET	TC	TIME CLOCK
GB	GROUND BAR	TEL	TELEPHONE
GEN	GENERATOR	TGB	TELEPHONE TERMINAL GROUND BAR
GFI	GROUND FAULT INTERRUPTER	TMGB	TELECOMMUNICATIONS MAIN GROUND BAR
GFP	GROUND FAULT PROTECTION	TTB	TELEPHONE TERMINAL BOARD
GND	GROUND	TV	TELEVISION
GRS	GALVANIZED RIGID STEEL	UL	UNDERWRITER'S LABORATORIES, INC.
HDG	HOT DIPPED GALVANIZED	UNCW	UNIVERSITY OF NORTH CAROLINA WILMINGTON.
HP	HORSEPOWER	UPS	UNINTERRUPTIBLE POWER SUPPLY
HT.	HEIGHT	UON	UNLESS OTHERWISE NOTED
ID	INSIDE DIAMETER	UT	UNDERGROUND TELEPHONE
IMC	INTERMEDIATE METAL CONDUIT	V	VOLTS
IT	INFORMATION TECHNOLOGY	VAC	VOLTS ALTERNATING CURRENT
KAIC	THOUSAND AMP SYMMETRICAL INTERRUPTING CAPACITY RMS	VDC	VOLTS DIRECT CURRENT
KCMIL	THOUSAND CIRCULAR MILS	W	WIRE
		WP	WEATHERPROOF
		XFMR	TRANSFORMER

UNCW
UNIVERSITY of NORTH CAROLINA WILMINGTON
601 S COLLEGE ROAD
WILMINGTON, NORTH CAROLINA 28403

PARKING DECK II AND SURFACE PARKING (DESIGN-BUILD)
SOUTH CAMPUS - 4965 RIEGEL ROAD

SCO ID NUMBER: 18-19226-01A
CODE: 41828
ITEM: 301

CONTRACTOR
Balfour Beatty Construction

DESIGNER

CLARKNEXSEN
1523 ELIZABETH AVENUE, SUITE 300
CHARLOTTE, NORTH CAROLINA 28204
704·377·8800
CLARK NEXSEN LICENSE NUMBER: C-1028

WALKER CONSULTANTS
13860 Ballantyne Corporate Place
Suite 140
Charlotte, NC 28277
T: 704.247.6230
www.walkerconsultants.com
NC License No. F-0518

McKIM&CREED
CIVIL ENGINEER
243 NORTH FRONT STREET
WILMINGTON, NORTH CAROLINA
28401
910.343.1048

PROFESSIONAL SEAL
NOT FOR CONSTRUCTION
CLARK NEXSEN CERT NO. 50680 NORTH CAROLINA
NORTH CAROLINA PROFESSIONAL SEAL 027766 ENGINEER
NC CORPORATE ENGINEERING LICENSE #C-1028

SUBMITTAL
04/15/2019
CONSTRUCTION DOCUMENT SUBMITTAL 01

REVISIONS

KEY PLAN

SHEET
ELECTRICAL LEGEND, NOTES AND ABBREVIATIONS

E-001

DESIGN: WAZ
DRAWN: KAW
REVIEW: WAZ

CN 8112

4/12/2019 2:11:23 PM
C:\Revit Projects\8172_UNCW Parking Deck II E17_Benton.Davis@clarknexsen.com.rvt

DUCTBANK CONDUIT SCHEDULE

TAG	DESCRIPTION
P	600V, 4" WAY–SECONDARY POWER FROM UTILITY TRANSFORMER. REFER TO DRAWING E–600
F/T	4" WAY WITH (3) 1–1/4" ID INNERDUCTS (MAXCELL OR HDPE INNERDUCT) ONE FOR COPPER, ONE FOR FIBER AND ONE SPARE. REFER TO DRAWING E–600
S	4" WAY SPARE FOR FUTURE USE

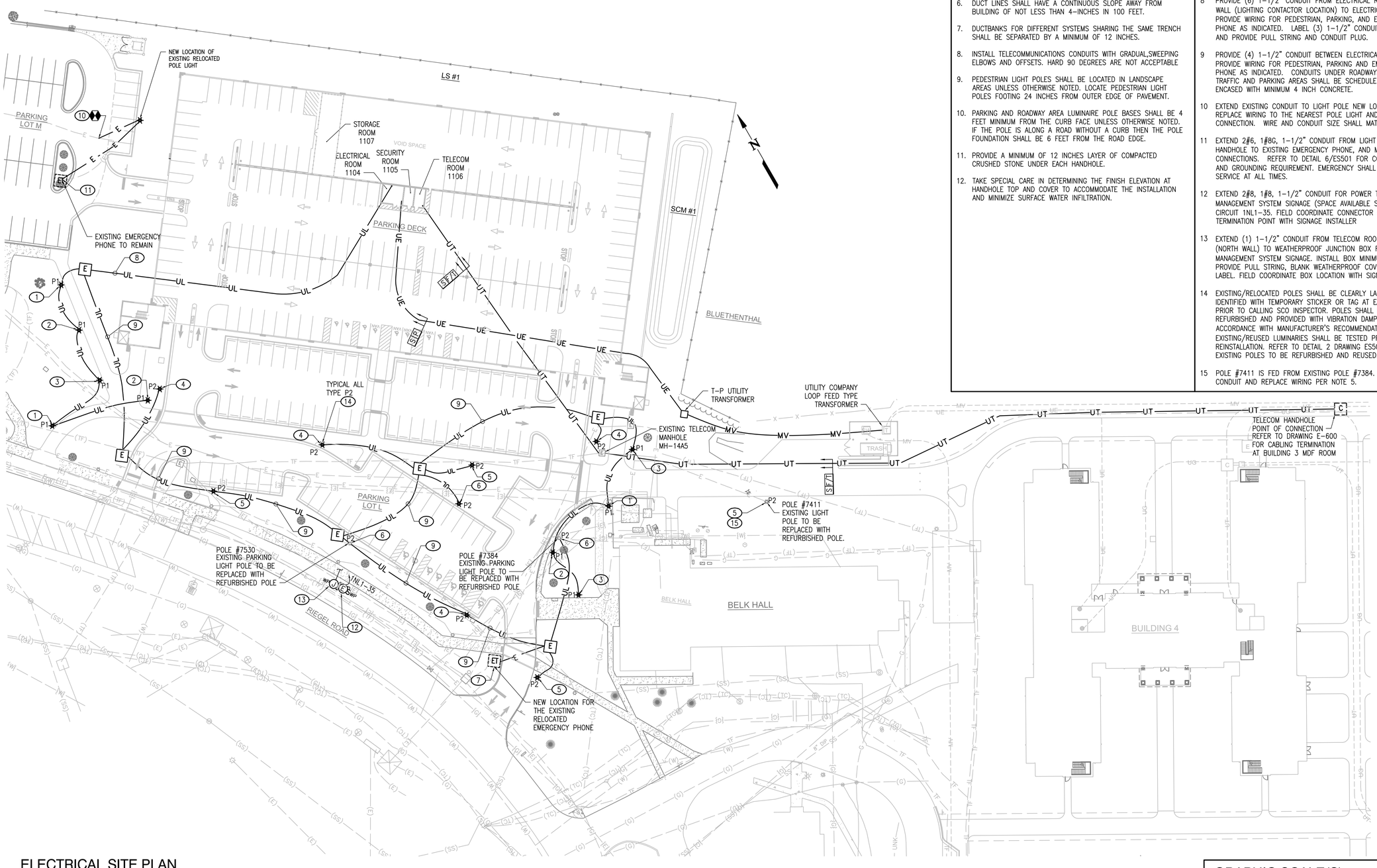

ELECTRICAL SITE PLAN

SCALE: 1" = 30'

GENERAL NOTES

1. COORDINATE UNDERGROUND CONDUIT ROUTINGS IN FIELD AND AVOID INTERFERENCE WITH OTHER TRADES. CONDUITS ARE SHOWN DIAGRAMMATICALLY, FINAL ROUTING TO BE DETERMINED IN THE FIELD.
2. THE MEDIUM VOLTAGE AND PRIMARY DISTRIBUTION SYSTEM PROVIDED BY UTILITY COMPANY SHALL BE UNDERGROUND, AND SHALL INCLUDE MEDIUM VOLTAGE AND PRIMARY CONDUCTORS, CONCRETE PAD, SWITCHES, TRANSFORMERS, GROUNDING AND TERMINATIONS.
3. COORDINATE TRANSFORMER SECONDARY CONDUIT SIZES WITH ELECTRICAL RISER DIAGRAMS AND COORDINATE CONDUIT TERMINATION POINTS WITH PARKING GARAGE FLOOR PLANS BEFORE CONSTRUCTION.
4. PROTECT PARTIALLY COMPLETED DUCT LINES FROM THE ENTRANCE OF DEBRIS AND DIRT WITH SUITABLE CONDUIT PLUGS. AT THE COMPLETION OF EACH SECTION OF DUCT LINE, CONDUIT SHALL BE CLEANED WITH A STIFF BRISTLE BRUSH HAVING THE SAME DIAMETER AS THE CONDUIT AND SHALL BE PULLED THROUGH EACH CONDUIT UNTIL CLEAR, THEN PLUGGED WITH TEMPORARY END PLUGS.
5. PROVIDE PULL STRING IN ALL EMPTY CONDUITS.
6. DUCT LINES SHALL HAVE A CONTINUOUS SLOPE AWAY FROM BUILDING OF NOT LESS THAN 4–INCHES IN 100 FEET.
7. DUCTBANKS FOR DIFFERENT SYSTEMS SHARING THE SAME TRENCH SHALL BE SEPARATED BY A MINIMUM OF 12 INCHES.
8. INSTALL TELECOMMUNICATIONS CONDUITS WITH GRADUAL,SWEEPING ELBOWS AND OFFSETS. HARD 90 DEGREES ARE NOT ACCEPTABLE
9. PEDESTRIAN LIGHT POLES SHALL BE LOCATED IN LANDSCAPE AREAS UNLESS OTHERWISE NOTED. LOCATE PEDESTRIAN LIGHT POLES FOOTING 24 INCHES FROM OUTER EDGE OF PAVEMENT.
10. PARKING AND ROADWAY AREA LUMINAIRE POLE BASES SHALL BE 4 FEET MINIMUM FROM THE CURB FACE UNLESS OTHERWISE NOTED. IF THE POLE IS ALONG A ROAD WITHOUT A CURB THEN THE POLE FOUNDATION SHALL BE 6 FEET FROM THE ROAD EDGE.
11. PROVIDE A MINIMUM OF 12 INCHES LAYER OF COMPACTED CRUSHED STONE UNDER EACH HANDHOLE.
12. TAKE SPECIAL CARE IN DETERMINING THE FINISH ELEVATION AT HANDHOLE TOP AND COVER TO ACCOMMODATE THE INSTALLATION AND MINIMIZE SURFACE WATER INFILTRATION.

(#) NOTES

1. PROVIDE 2#6,1#8G FOR POWER TO SITE PEDESTRIAN LIGHTING. USE CIRCUIT NHDP–7. CONNECT VIA CONTACTOR LC1
2. PROVIDE 2#6, 1#8G FOR POWER TO SITE PEDESTRIAN LIGHTING. USE CIRCUIT NHDP–9. CONNECT VIA CONTACTOR LC1
3. PROVIDE 2#6, 1#8G FOR POWER TO SITE PEDESTRIAN LIGHTING. USE CIRCUIT NHDP–11. CONNECT VIA CONTACTOR LC1
4. PROVIDE 2#6, 1#8G FOR POWER TO SITE PARKING LIGHTING. USE CIRCUIT NHDP–32,34. CONNECT VIA CONTACTOR LC1
5. PROVIDE 2#6, 1#8G FOR POWER TO SITE PARKING LIGHTING. USE CIRCUIT NHDP–34,36. CONNECT VIA CONTACTOR LC1
6. PROVIDE 2#6, 1#8G FOR POWER TO SITE PARKING LIGHTING. USE CIRCUIT NHDP–32,36. CONNECT VIA CONTACTOR LC1
7. PROVIDE 2#6, 1#8G, 1–1/2" CONDUIT FOR POWER TO EXISTING RELOCATED EMERGENCY PHONE. USE CIRCUIT NHDP–30. TEMPORARILY CONNECT RELOCATED EMERGENCE PHONE FROM EXISTING CIRCUIT. EXTEND CONDUIT AND WIRE TO NEW LOCATION. EMERGENCY PHONE SHALL REMAIN IN SERVICE AT ALL TIMES.
8. PROVIDE (6) 1–1/2" CONDUIT FROM ELECTRICAL ROOM NORTH WALL (LIGHTING CONTACTOR LOCATION) TO ELECTRICAL HANDHOLE. PROVIDE WIRING FOR PEDESTRIAN, PARKING, AND EMERGENCY PHONE AS INDICATED. LABEL (3) 1–1/2" CONDUIT AS SPARE, AND PROVIDE PULL STRING AND CONDUIT PLUG.
9. PROVIDE (4) 1–1/2" CONDUIT BETWEEN ELECTRICAL HANDHOLES. PROVIDE WIRING FOR PEDESTRIAN, PARKING AND EMERGENCY PHONE AS INDICATED. CONDUITS UNDER ROADWAYS, HEAVY TRAFFIC AND PARKING AREAS SHALL BE SCHEDULE 80 PVC AND ENCASED WITH MINIMUM 4 INCH CONCRETE.
10. EXTEND EXISTING CONDUIT TO LIGHT POLE NEW LOCATION, REPLACE WIRING TO THE NEAREST POLE LIGHT AND MAKE CONNECTION. WIRE AND CONDUIT SIZE SHALL MATCH EXISTING.
11. EXTEND 2#6, 1#8G, 1–1/2" CONDUIT FROM LIGHT POLE HANDHOLE TO EXISTING EMERGENCY PHONE, AND MAKE CONNECTIONS. REFER TO DETAIL 6/ES501 FOR CONDUIT, BASE AND GROUNDING REQUIREMENT. EMERGENCY SHALL REMAIN IN SERVICE AT ALL TIMES.
12. EXTEND 2#8, 1#8, 1–1/2" CONDUIT FOR POWER TO THE PARKING MANAGEMENT SYSTEM SIGNAGE (SPACE AVAILABLE SIGN). USE CIRCUIT 1NL1–35. FIELD COORDINATE CONNECTOR AND TERMINATION POINT WITH SIGNAGE INSTALLER
13. EXTEND (1) 1–1/2" CONDUIT FROM TELECOM ROOM BACK WALL (NORTH WALL) TO WEATHERPROOF JUNCTION BOX FOR PARKING MANAGEMENT SYSTEM SIGNAGE. INSTALL BOX MINIMUM 10" AFG, PROVIDE PULL STRING, BLANK WEATHERPROOF COVER PLATE AND LABEL. FIELD COORDINATE BOX LOCATION WITH SIGNAGE INSTALLER.
14. EXISTING/RELOCATED POLES SHALL BE CLEARLY LABELED AND IDENTIFIED WITH TEMPORARY STICKER OR TAG AT EACH POLE PRIOR TO CALLING SCO INSPECTOR. POLES SHALL BE REFURBISHED AND PROVIDED WITH VIBRATION DAMPER IN ACCORDANCE WITH MANUFACTURER'S RECOMMENDATION. EXISTING/REUSED LUMINARIES SHALL BE TESTED PRIOR TO REINSTALLATION. REFER TO DETAIL 2 DRAWING ES502 FOR EXISTING POLES TO BE REFURBISHED AND REUSED.
15. POLE #7411 IS FED FROM EXISTING POLE #7384. KEEP EXISTING CONDUIT AND REPLACE WIRING PER NOTE 5.

GRAPHIC SCALE(S)

1"=30' 0 30' 60' 120'

UNCW
UNIVERSITY of NORTH CAROLINA WILMINGTON
601 SOUTH COLLEGE ROAD
WILMINGTON, NORTH CAROLINA 28403

PARKING DECK II AND SURFACE PARKING (DESIGN-BUILD)
SOUTH CAMPUS - 4965 RIEGEL ROAD

SCO ID NUMBER: 18-19226-01A
CODE: 41828
ITEM: 301

CONTRACTOR
Balfour Beatty Construction

DESIGNER

CLARKNEXSEN
1523 ELIZABETH AVENUE, SUITE 300
CHARLOTTE, NORTH CAROLINA 28204
704·377·8800
CLARK NEXSEN LICENSE NUMBER: C-1028

WALKER CONSULTANTS
13860 Ballantyne Corporate Place
Suite 140
Charlotte, NC 28277
T: 704.247.6230
www.walkerconsultants.com
NC License No. F-0518

McKIM&CREED
CIVIL ENGINEER
243 NORTH FRONT STREET
WILMINGTON, NORTH CAROLINA
28401
910.343.1048

PROFESSIONAL SEAL
NOT FOR CONSTRUCTION
CLARK NEXSEN CERT NO. 50680 NORTH CAROLINA
NORTH CAROLINA PROFESSIONAL SEAL 027766 ENGINEER
NC CORPORATE ENGINEERING LICENSE #C-1028

SUBMITTAL
04/15/2019
CONSTRUCTION DOCUMENT SUBMITTAL 01

REVISIONS

KEY PLAN

SHEET
ELECTRICAL SITE PLAN

ES101

DESIGN: WAZ
DRAWN: KAW
REVIEW: WAZ

CN 8112

E:\Projects\8000\8112-UNCW Parking Deck II\CAD UNCW\Sheets\E\ES101.dwg Fri, 12 Apr 2019 - 11:39am Benton.Davis

TRANSFORMER PAD INSTALLATION GENERAL NOTES

1. TRANSFORMER PADS SHALL BE INSTALLED IN A LOCATION TO REMAIN READILY ACCESSIBLE FOR LINE TRUCKS.
2. SOIL UNDERNEATH PADS SHALL BE FREE OF ROOTS AND OTHER ORGANIC MATERIALS AND BE THOROUGHLY TAMPED TO PREVENT WASHING. EXERCISE CARE IN BACKFILLING AND GRADING AROUND PAD.
3. SERVICE CONDUIT SHALL BE LOCATED IN THE EXTREME RIGHT SIDE OF THE SECONDARY COMPARTMENT.
4. ACTUAL PAD DIMENSIONS VARY. CONTRACTOR SHALL COORDINATE REQUIRED PAD DIMENSIONS WITH UTILITY COMPANY.

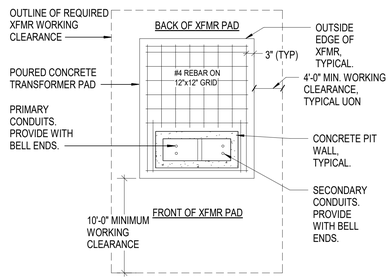

7 SERVICE TRANSFORMER PAD DETAIL PLAN (BY UTILITY COMPANY)
NO SCALE

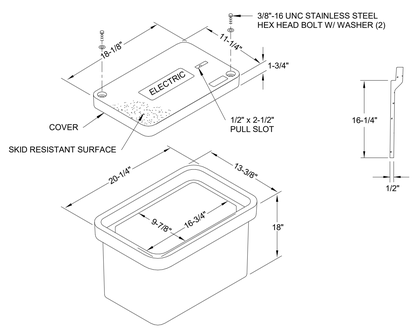

5 HANDHOLE DETAIL
NO SCALE

NOTES:
1. DIMENSIONS ARE TYPICAL. SEE DETAIL 2 THIS SHEET, FOR CONDUIT ARRANGEMENT REQUIREMENTS WITHIN DUCTBANK.
2. MINIMUM EARTH COVERAGE SHALL BE 18-INCHES FOR DUCTBANKS CARRYING CIRCUITS 600V OR LESS.
3. CONDUIT SHALL BE MINIMUM 4" SCHEDULE 40 PVC, UON. USE SCHEDULE 80 PVC FOR INSTALLATION UNDER ROADS AND HEAVY TRAFFIC AREAS.

1 TYPICAL CONCRETE ENCASED DUCTBANK DETAIL
NO SCALE

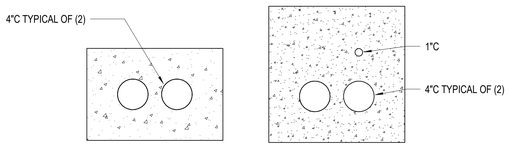

2 DUCTBANK CONFIGURATION DETAILS
NO SCALE

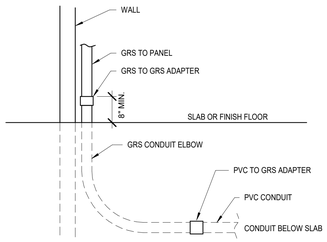

3 CONDUIT TRANSITION DETAIL (THROUGH SLAB)
NO SCALE

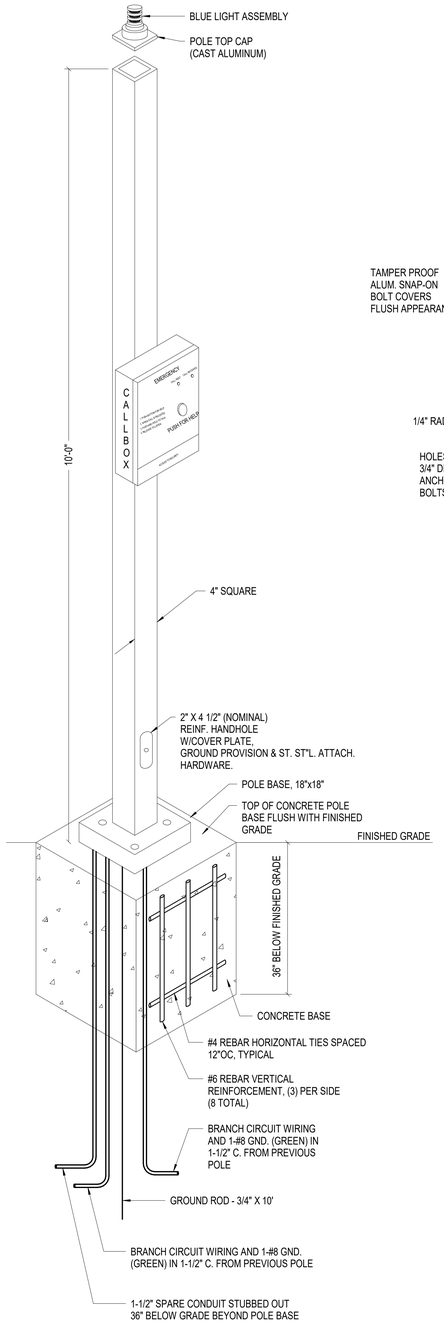

EXISTING:
SQUARE ALUMINUM NON-TAPERED POLE
CATALOG #C24-14A-S410-SSU-TS

SHAFT: MANUFACTURED FROM ALUMINUM ALLOY 6063-T6 WITH AN OVERALL HEIGHT OF 10'-0", A WALL THICKNESS OF 0.125", AND IT SHALL BE 4" SQUARE.

BASE: MANUFACTURED FROM 356-T6 ALUMINUM ALLOY. IT SHALL BE 10" SQUARE AND HAVE A 9" BOLT CIRCLE DIAMETER WITH TAMPER PROOF BOLT COVERS.

FINISH: POLE ASSEMBLY AND ALL CORRESPONDING ACCESSORIES TO RECEIVE A POWDER COAT FINISH. S.W. UHS8-9023 "SMOOTH OYSTER" 80% GLOSS.

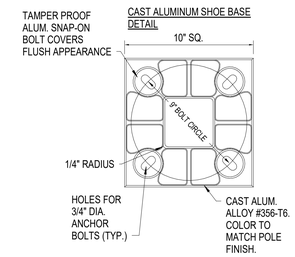

NOTE:
ALL HARDWARE - 18-8 STAINLESS STEEL

ANCHORAGE: 3/#4" DIA. X 18" LONG ANCHOR BOLTS WITH 3" HOOK AND 3" THREAD. MATERIAL PER ASTM F1554GR55/A576, TOP 8" THREADED PORTION GALVANIZED PER ASTM A-153, WITH LW'S, FW'S AND NUTS ALL GALV.

6 EMERGENCY PHONE DETAIL (FOR EXISTING RELOCATED PHONES)
NO SCALE

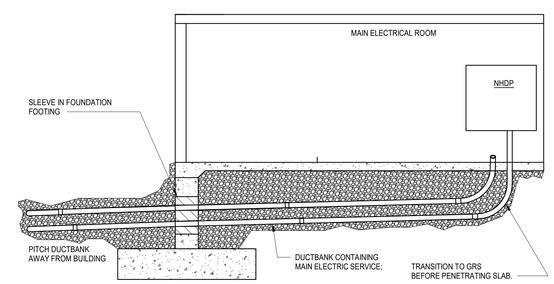

4 SECONDARY DUCTBANK ENTRY INTO GARAGE
NO SCALE

UNCW
UNIVERSITY of NORTH CAROLINA WILMINGTON
601 S COLLEGE ROAD
WILMINGTON, NORTH CAROLINA 28403

PARKING DECK II AND SURFACE PARKING (DESIGN-BUILD)
SOUTH CAMPUS - 4965 RIEGEL ROAD

SCO ID NUMBER: 18-19226-01A
CODE: 41828
ITEM: 301

CONTRACTOR
Balfour Beatty Construction

DESIGNER

CLARKNEXSEN
1523 ELIZABETH AVENUE, SUITE 300
CHARLOTTE, NORTH CAROLINA 28204
704·377·8800
CLARK NEXSEN LICENSE NUMBER: C-1028

WALKER CONSULTANTS
13860 Ballantyne Corporate Place
Suite 140
Charlotte, NC 28277
T: 704.247.6230
www.walkerconsultants.com
NC License No. F-0518

McKIM&CREED
CIVIL ENGINEER
243 NORTH FRONT STREET
WILMINGTON, NORTH CAROLINA
28401
910.343.1048

PROFESSIONAL SEAL
NOT FOR CONSTRUCTION
CLARK NEXSEN CERT NO. 50680 NORTH CAROLINA
NORTH CAROLINA PROFESSIONAL SEAL 027765 ENGINEER
NC CORPORATE ENGINEERING LICENSE #C-1028

SUBMITTAL
04/15/2019
CONSTRUCTION DOCUMENT SUBMITTAL 01

REVISIONS

KEY PLAN

SHEET
ELECTRICAL SITE DETAILS

ES501

DESIGN: WAZ
DRAWN: KAW
REVIEW: WAZ

CN 8112

4/12/2019 2:11:48 PM
C:\Revit Projects\8112_UNCW Parking Deck II E17_Benton.Davis@clarknexsen.com.rvt

NOTE:
1. CONCRETE SHALL HAVE MINIMUM STRENGTH OF 4000 PSI AND MAXIMUM WATER/CEMENT RATIO OF 0.45. CONCRETE EXPOSED ABOVE GRADE SHALL CONTAIN ENTRAINED AIR.
2. ANCHOR BOLTS FOR RELOCATED LIGHT POLES SHALL MATCH DIAMETER AND EMBEDMENT OF EXISTING, AND SHALL BE ASTM F15546R55 (WELDABLE), AT A MINIMUM.

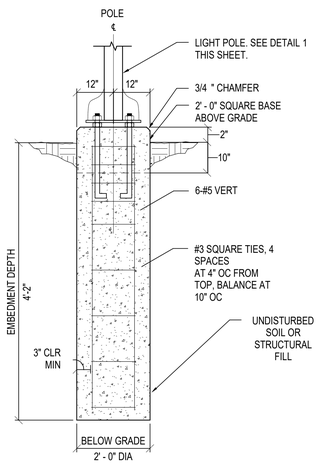

SIDEWALK LIGHT POLE BASE

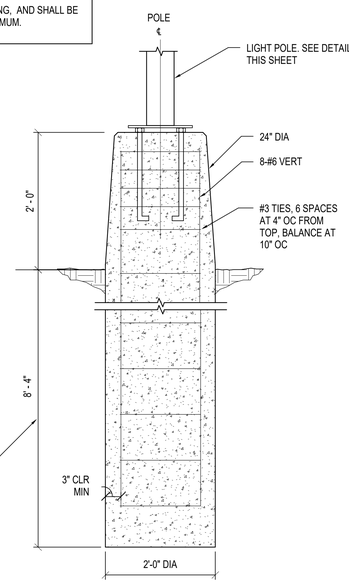

PARKING LIGHT POLE BASE

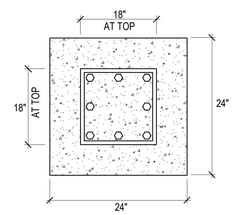

REINF. PLAN - ABOVE GRADE

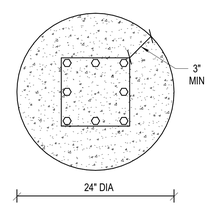

REINF. PLAN - BELOW GRADE

3 POLE BASE STRUCTURAL DETAILS
NO SCALE

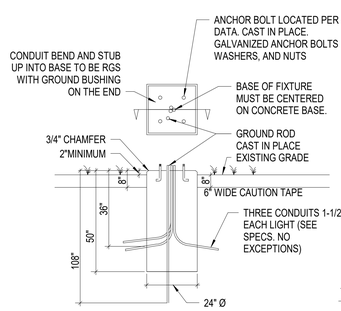

SECTION A-A
BASE DETAIL

NOTE:
1. SEE DETAIL 3 THIS SHEET FOR POLE BASE STRUCTURAL DETAIL

LUMINARIES:
1. LUMINARIES SHALL CONFORM TO EXISTING FIXTURES LED LANTERN STYLE POST TOP FIXTURE, U.L. LISTED 60W, 6000 LUMEN, FROSTED GLASS, 120-277V, COLOR: BLACK COLOR TEMP: 5000K, LIGHT DISTRIBUTION: TYPE V MANUFACTURE: YAORONG MODEL: YR-TP300-W060, PROVIDE WITH ADAPTER FOR 3 INCH POLE, MODEL# 3 SQR-SP-D-UNCW. REFER TO DETAIL. CURRENT VENDOR: GREENLIGHTS, CARY N.C., TEL: 919-766-8900

STANDARD POLE:
1. STANDARDS SHALL BE 14 FEET IN LENGTH U.L. LISTED, COMBINATION TRANSFORMER BASE & TAPERED ALUMINUM POLE, COLOR: BLACK
2. PULL ALL THREE PHASES TO EACH RUN FOR FUTURE USE 3.
3. WIRE LIGHTS TO EACH PHASE IN SEQUENCE: I.E. A-B-C, A-B-C. ECT.

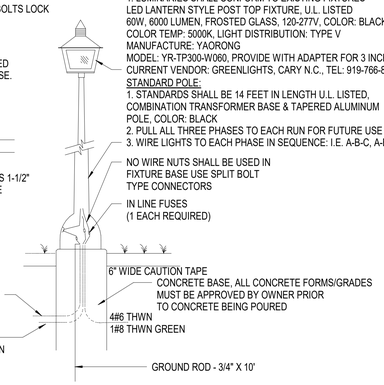

TYPICAL ASSEMBLY

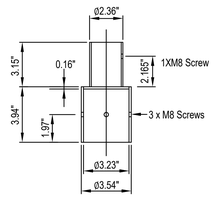

CUSTOMIZED ADAPTOR FOR 3 INCHES POLE
MODULE NUMBER: 3SQR-SP-D-UNCW

1 SIDEWALK LIGHTING DETAILS
NO SCALE

FIXTURE:
MANUFACTURE: FINTRONX
SERIES: APOLLO
WATTAGE: 240W
COLOR TEMO: 5000K
LENS: A3M112
FIXTURE COLOR: BLACK
STANDARD VOLTAGE: 480V
NO SENSOR OPTIONS

ONE ARM BRACKET POLE, COLOR: BLACK

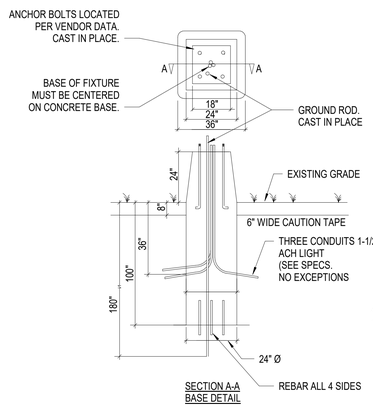

SECTION A-A
BASE DETAIL

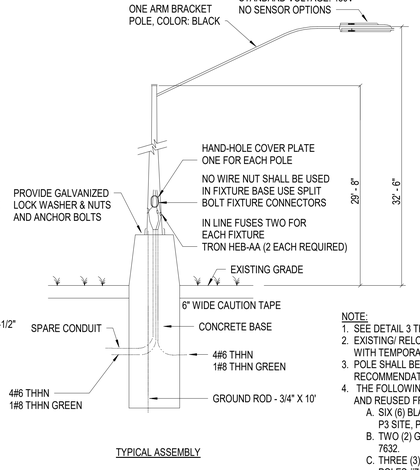

TYPICAL ASSEMBLY

NOTE:
1. SEE DETAIL 3 THIS SHEET FOR POLE BASE STRUCTURAL DETAIL
2. EXISTING/ RELOCATED POLES SHALL BE CLEARLY LABELED AND IDENTIFIED WITH TEMPORARY STICKER OR TAG AT EACH POLE.
3. POLE SHALL BE PROVIDED WITH VIBRATION DAMPER PER MANUFACTURER'S RECOMMENDATION
4. THE FOLLOWING ARE THE POLES, ARMS AND FIXTURES TO BE REFURBISHED AND REUSED FROM P3 SITE AND EXISTING PARKING LOT "L";
   A. SIX (6) BLACK POLES (DOUBLE HEADS CONVERT TO SINGLE HEAD) FROM P3 SITE, POLES # 7409, 7635, 7636, 7637, 7638 AND 7639.
   B. TWO (2) GREEN POLES (SINGLE HEADS) FROM P3 SITE, POLES #7631 AND 7632.
   C. THREE (3) POLES (SINGLE HEAD) FROM EXISTING PARKING LOT "L", POLES #7532, 7831 AND 7833.

2 PARKING LIGHT DETAILS (EXISTING RELOCATED POLE & LIGHT)
NO SCALE

UNCW
UNIVERSITY of NORTH CAROLINA WILMINGTON
601 S COLLEGE ROAD
WILMINGTON, NORTH CAROLINA 28403

PARKING DECK II AND SURFACE PARKING (DESIGN-BUILD)
SOUTH CAMPUS - 4965 RIEGEL ROAD

SCO ID NUMBER: 18-19226-01A
CODE: 41828
ITEM: 301

CONTRACTOR
Balfour Beatty Construction

DESIGNER

CLARKNEXSEN
1523 ELIZABETH AVENUE, SUITE 300
CHARLOTTE, NORTH CAROLINA 28204
704·377·8800
CLARK NEXSEN LICENSE NUMBER: C-1028

WALKER CONSULTANTS
13860 Ballantyne Corporate Place
Suite 140
Charlotte, NC 28277
T: 704.247.6230
www.walkerconsultants.com
NC License No. F-0518

McKIM&CREED
CIVIL ENGINEER
243 NORTH FRONT STREET
WILMINGTON, NORTH CAROLINA
28401
910.343.1048

PROFESSIONAL SEAL
NOT FOR CONSTRUCTION
CLARK NEXSEN CERT NO. 50680 NORTH CAROLINA
NORTH CAROLINA PROFESSIONAL SEAL 027766 ENGINEER
NC CORPORATE ENGINEERING LICENSE #C-1028

SUBMITTAL
04/15/2019
CONSTRUCTION DOCUMENT SUBMITTAL 01

REVISIONS

KEY PLAN

SHEET
ELECTRICAL SITE DETAILS

ES502

DESIGN: WAZ
DRAWN: KAW
REVIEW: WAZ

CN 8112

4/12/2019 2:11:50 PM
C:\Revit Projects\8112_UNCW Parking Deck II E17_Benton.Davis@clarknexsen.com.rvt

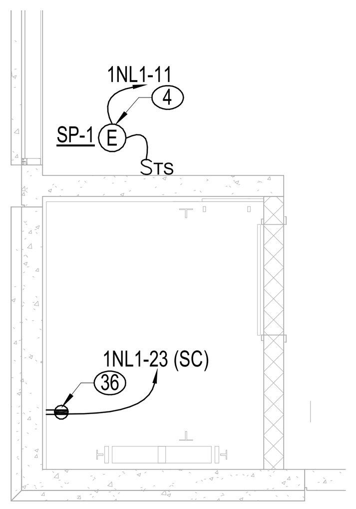

ENLARGED SOUTHWEST ELEVATOR POWER PLAN

2 — 1/4" = 1'-0"

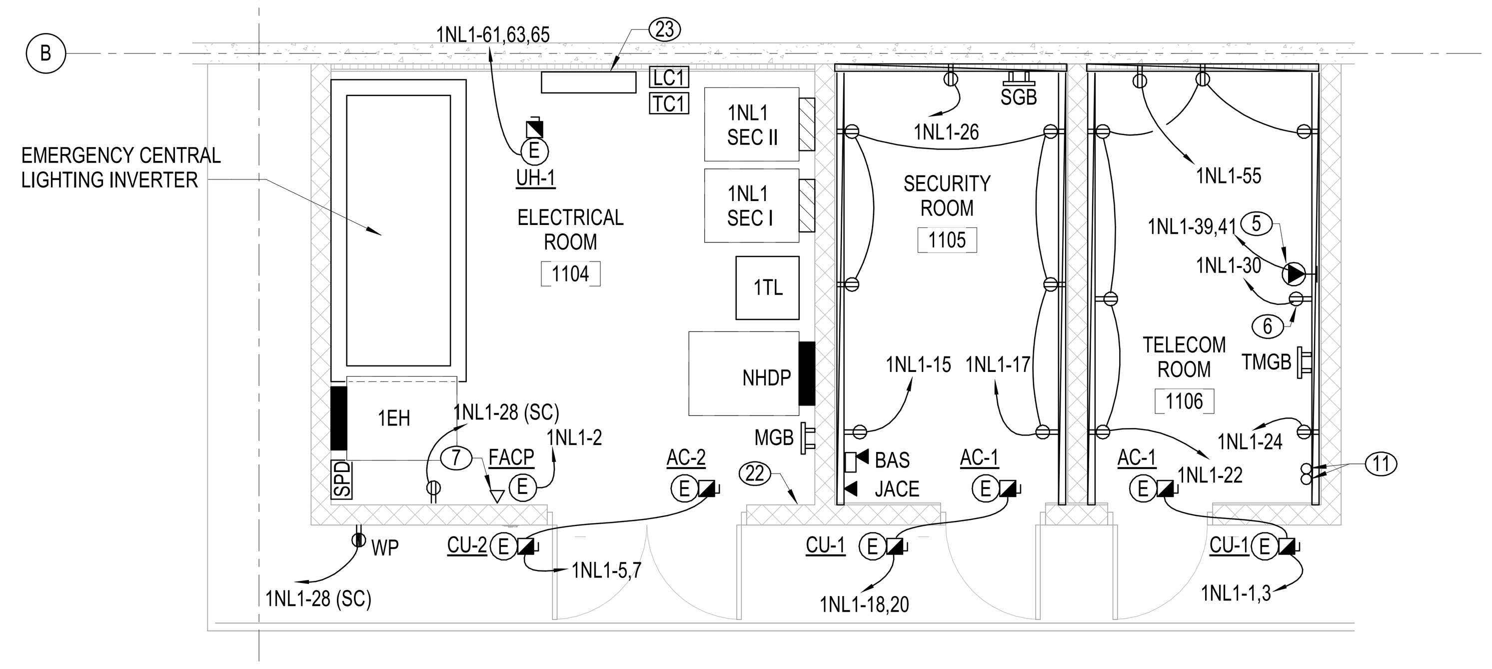

ELECTRICAL/TELECOM ROOMS

3 — 1/4" = 1'-0"

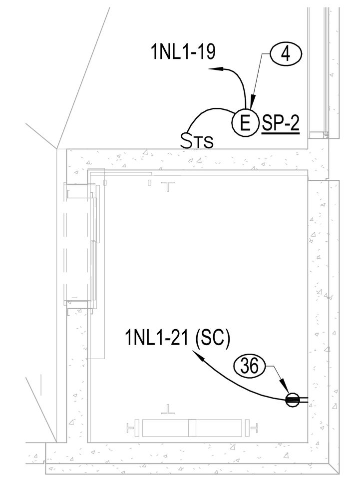

ENLARGED SOUTHEAST ELEVATOR POWER PLAN

4 — 1/4" = 1'-0"

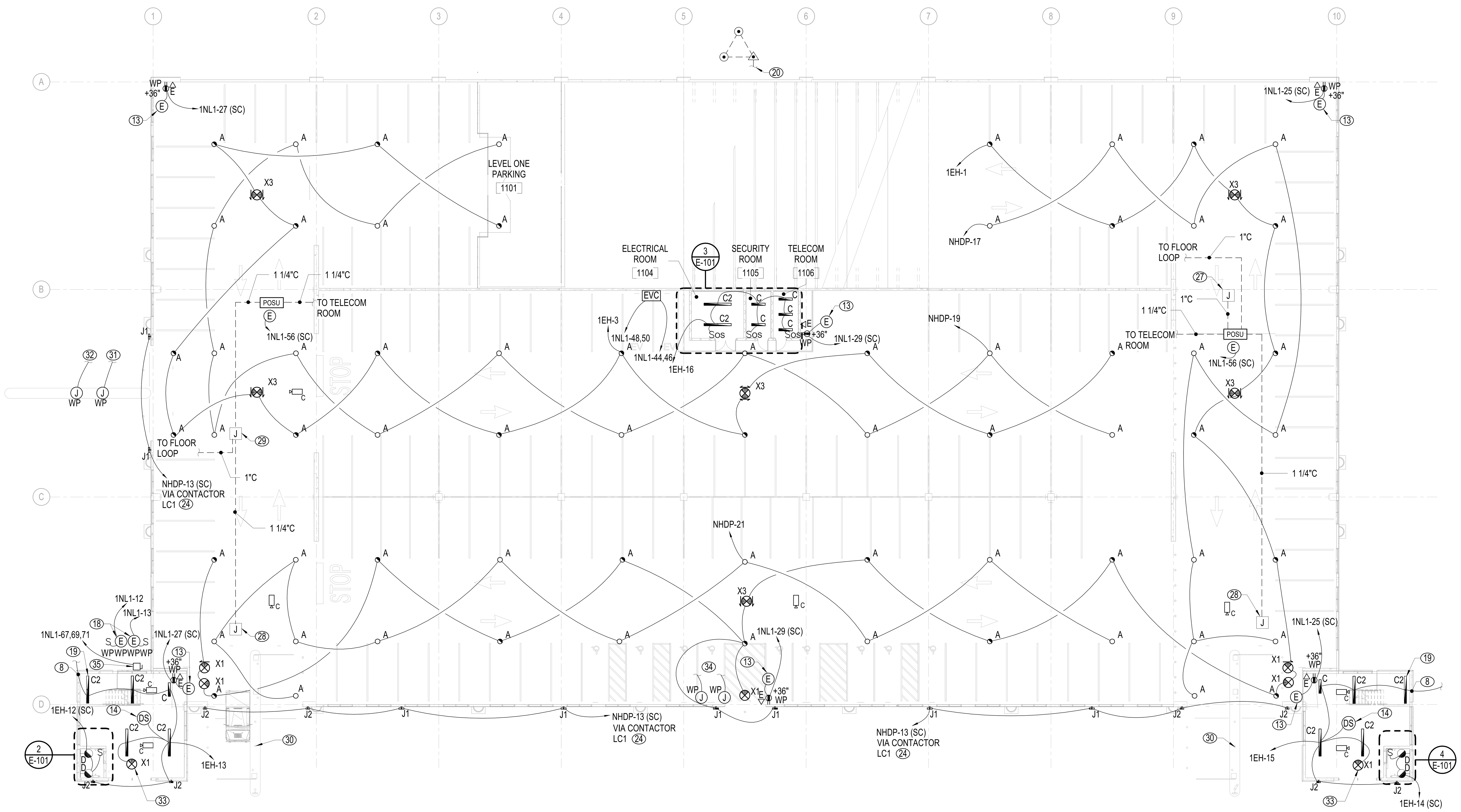

FIRST LEVEL - LIGHTING, POWER, AND SYSTEMS PLAN

1 — 1/16" = 1'-0"

GENERAL NOTES

1. PROVIDE EMERGENCY LIGHTING AND SIGNAGE AS REQUIRED BY LOCAL CODES TO ILLUMINATE AND IDENTIFY EGRESS PATHS UTILIZING THE CENTRAL LIGHTING INVERTER. WIRING FROM EMERGENCY SOURCE DISTRIBUTION OVERCURRENT PROTECTION TO EMERGENCY LOADS SHALL BE KEPT ENTIRELY INDEPENDENT OF ALL OTHER WIRING AND EQUIPMENT AND SHALL NOT ENTER THE SAME RACEWAY, CABLE BOX OR CABINET WITH OTHER WIRING.
2. CONDUITS ARE TO BE LOCATED IN THE GARAGE INTERIOR TO MINIMIZE VISUAL IMPACT. DO NOT ROUTE CONDUITS ON THE EXTERIOR OF ANY PART OF THE STRUCTURE. FIXTURES LOCATED ON THE EXTERIOR OF THE STRUCTURE ARE TO BE FED FROM BEHIND WITH NO CONDUIT VISABLE FROM THE OUTSIDE.
3. ALL RECEPTACLES SHALL BE GFI TYPE, UNLESS OTHERWISE NOTED. ALL RECEPTACLES EXCEPT THOSE IN ENCLOSED ROOMS SHALL HAVE WEATHERPROOF WHILE-IN-USE COVERS.

(#) NOTES

1 ELEVATION MOTOR FUSED DISCONNECT. FUSE PER MANUFACTURER'S RECOMMENDATION. REFER TO RISER DIAGRAM E-600 FOR ADDITIONAL INFORMATION. DISCONNECT SHALL BE LOCKABLE IN THE OPEN POSITION.

2 ELEVATOR CAB LIGHT AND CONTROL FUSED DISCONNECT. PROVIDE 120V, 30A, 20A FUSE LOCKABLE IN THE OPEN POSITION.

3 PROVIDE (1) VOICE LINE FOR EACH ELEVATOR. FIELD COORDINATE SPECIFICS AND FINAL LOCATION WITH ELEVATOR SUPPLIER.

4 SUMP PUMP CONTROLLER. COORDINATE LOCATION WITH SUMP PUMP SUPPLIER.

5 PROVIDE NEMA L6-20R, 208V, TWIST-LOCK STYLE RECEPTACLE. LOCATE BELOW THE PROPOSED TELECOMMUNICATIONS CABINET. REFER TO DRAWING E-600 FOR CABINET REQUIREMENTS.

6 PROVIDE NEMA-5-20R, 120V, 20A, RECEPTCACLE. LOCATE BELOW THE PROPOSED WALL MOUNT TELECOMMUNICATIONS CABINET. REFER TO DRAWING E-600 FOR CABINET REQUIREMENTS.

7 VOICE LINE FOR FIRE ALARM DIGITAL COMMUNICATOR. COORDINATE SPECIFICS WITH FIRE ALARM SYSTEM SUPPLIER.

8 CONNECT TO STAIR LUMINAIRE ON TIER ABOVE.

9 CONNECT TO STAIR LUMINAIRE ON TIER ABOVE AND TIER BELOW.

10 CONNECT TO STAIR LUMINAIRE ON TIER BELOW.

11 (2) 4" INCOMING TELECOM CONDUITS FROM MANHOLE MH-14A5. REFER TO DRAWING ES101 FOR CONTINUATION.

12 REFER TO LUMINAIRE SCHEDULE FOR MOUNTING SPECIFICS OF LUMINAIRE LOCATED AT TOP OF ELEVATOR SHAFT.

13 PROVIDE CONNECTION TO EMERGENCY PHONE. EXTEND 2#12, 1#12,3/4"C FROM RECEPTACLE JUNCTION BOX TO BUTTON OF CALL BOX.

14 DAYLIGHT SENSOR FOR DAYLIGHT HARVESTING. PROVIDE ONE SENSOR PER STAIR TOWER AND CONNECT TO FOUR (3) TYPE C2 AND (1) TYPE C LUMINAIRES ON EACH TIER AND (2) TYPE C2 AND (2) TYPE C LUMINAIRS ON THE TOP TIER FIFTH LEVEL. LOCATE SENSOR ON GROUND TIER LEVEL PER MANUFACTURER RECOMMENDATIONS. DO NOT CONNECT LAMINAR TYPE C2 AT THE STAIR LOWER LANDING TO THE DAYLIGHT SENSOR.

15 COORDINATE ANCHOR BOLT PATTERN OF POLE WITH DECK MANUFACTURER PRIOR TO ORDERING POLE. COORDINATE DRILL PATTERN AND BOLT PATTERN OF LUMINAIRE MOUNT WITH POLE MANUFACTURER PRIOR TO ORDERING POLE.

16 BOND LIGHT POLE WITH #4 BARE COPPER WIRE TO BASE OF COLUMN'S VERTICAL REINFORCING BARS (IF NOT LESS THAN 1/2" IN DIAMETER), INSTALLED IN MULTIPLE PIECES AND CONNECTED TOGETHER BY THE USUAL STEEL TIE WIRES, WELDING, EXOTHERMIC WELDING, OR OTHER EFFECTIVE MEANS TO CREATE A CONTINUOUS PATH TO EARTH.

17 COORDINATE STEEL VERTICAL REINFORCING BAR CONNECTION TO ENSURE CONTINUOUS PATH TO EARTH WITH CONTRACTOR PRIOR TO CONCRETE IS POURED FOR EACH LIGHT POLE LOCATION.

18 PROVIDE CONNECTION TO HEATED BACKFLOW AND IRRIGATION ENCLOSURE, IRRIGATION CONTROLLER, AND ASSOCIATED HEAT TRACING. COORDINATE CONNECTION REQUIREMENT WITH EQUIPMENT INSTALLER. REFER TO SITE DRAWING CG100 AND PLUMBING DRAWINGS P101 AND P201 FOR LOCATION.

19 CONNECT LUMINAIRE A HEAD OF LOCAL CONTROL

20 GROUND TRIAD, LOCATE MINIMUM 5' FROM BUILDING. EXTEND 1-1/4"C FROM GROUND TEST WELL TO MAIN GROUND ROD LOCATED IN THE ELECTRICAL ROOM 1104 (MGB). INSTALL CONDUIT MINIMUM 30" BELOW FINISHED GRADE. REFER TO DETAILS 1 AND 2 DRAWING E-500 FOR ADDITIONAL REQUIREMENT

21 PHOTOCELL FOR BRANCH CIRCUITS VIA LIGHTING CONTACTOR LC1. MOUNT PHOTOCELL UNDER ROOF EAVE OF STAIR TOWER. ORIENT FACING NORTH.

22 MOUNT A COPY OF THE ELECTRICAL POWER RISER DIAGRAM, UNDER CLEAR PROTECTIVE MATERIAL AT THIS LOCATION.

23 PROVIDE NEMA1 SCREW-OVER WIREWAY, 8" WIDE X 8" HIGH X 36" LONG FOR SITE LIGHTING UNDERGROUND CONDUIT TERMINATIONS. MOUNT 24" AFF.

24 TYPE J1 AND J2 CONNECTED VIA LIGHTING CONTACTOR LC1 LUMINAIRES SHALL NOT BE PROVIDED WITH INTEGRAL PHOTOCELL. REFER TO LUMINAIRE SCHEDULE'S NOTES.

25 MOUNT LUMINAIRE AT 17' AFF TO CENTER. COORDINATE LOCATION WITH ARCHITECTURAL DRAWINGS. REFER TO LUMINAIRE SCHEDULE FOR ADDITIONAL INFORMATION.

26 JUNCTION BOXES FOR FUTURE ELECTRIC VEHICLE CHARGER. REFER TO SYMBOL LEGEND FOR ADDITIONAL INFORMATION. TYPICAL FOR SECOND AND THIRD LEVELS ONLY.

27 PROVIDE TWO-GANG JUNCTION BOX FOR CONNECTION TO VEHICLE COUNTING SENSORS. EXTEND LOW VOLTAGE CABLE 1" CONDUIT TO EACH SENSOR AND MAKE CONNECTIONS. COORDINATE LOCATION WITH STRUCTURAL DRAWINGS AG401 AND AG402 AND SYSTEM VENDOR.

28 PROVIDE TWO-GANG JUNCTION BOX FOR CONNECTION TO LIGHTED SIGNS HANGING FROM BOTTOM OF DOUBLE TEES OVER EACH LANE (GREEN ARROW / X) AND EXTERIOR LIGHTED SIGNS, (ENTER/ EXIT) OVER EACH LANE. COORDINATE SIGNAGE LOCATION WITH STRUCTURAL DRAWINGS, AG401 AND AG402 AND SYSTEM VENDOR. EXTEND LOW VOLTAGE CABLE IN 1" CONDUIT TO EACH SIGN.

29 PROVIDE TWO-GANG JUNCTION BOX FOR CONNECTION TO LIGHTED SIGNS HANGING FROM BOTTOM OF DOUBLE TEES OVER EACH LANE (GREEN ARROW / X). COORDINATE SIGNAGE LOCATION WITH STRUCTURAL DRAWINGS, AG401 AND AG402 AND SYSTEM VENDOR. EXTEND LOW VOLTAGE CABLE IN 1" CONDUIT TO EACH SIGN.

30 REFER TO DETAIL 9 DRAWING E-500 FOR POWER AND DATA REQUIREMENTS.

31 EXTEND (1) 1" CONDUIT UNDERGROUND FROM WEATHERPROOF JUNCTION BOX TO ELECTRICAL ROOM PANEL 1NL1 SECTION II FOR FUTURE GATE AND TERMINATE AT BOTH ENDS. MOUNT JUNCTION BOX 12" AFF PROVIDE WEATHERPROOF COVER PLATE AND LABEL.

32 EXTEND (1) 1-1/2" CONDUIT UNDERGROUND FROM WEATHERPROOF JUNCTION BOX TO TELECOM ROOM EAST WALL FOR FUTURE GATE. MOUNT JUNCTION BOX 10" AFG, PROVIDE WEATHERPROOF COVER PLATE AND LABEL. STUB-UP CONDUIT IN TELECOM ROOM 10" AFF.

33 REFER TO ARCHITECTURAL CURTAIN WALL DETAIL DRAWING FOR EXIT SIGN MOUNTING LOCATION.

34 EXTEND (1) 1" CONDUIT FOR POWER AND (1) 1" CONDUIT FOR DATA, SAME AS NOTES 31 AND 32 EXCEPT FOR FUTURE PAY BY SPACE MACHINE. COORDINATE FINAL LOCATION WITH UNCW PRIOR TO INSTALLATION.

35 PROVIDE HEAVY DUTY NEMA 4X, 240 V, 30 AMP NON-FUSED DISCONNECT FOR BOOSTER PUMP. EXTEND 3#8, 1#8 G, 1" CONDUIT UNDERGROUND FROM DISCONNECT TO PANEL 1NL1 SECTION II TO CIRCUIT INDICATED, AND EXTEND 3#12, 1#12 G, 3/4" CONDUIT FROM DISCONNECT TO PUMP AND MAKE CONNECTIONS. PUMP HEATED ENCLOSURE SHALL BE CONNECTED TO THE BACKFLOW HEATED ENCLOSURE CIRCUIT 1NL1-12 AT THIS LOCATION. REFER TO KEY NOTE 18 FOR ADDITIONAL INFORMATION.

36 MOUNT RECEPTACLE 12" AFF IN REAR WALL.

37 PROVIDE SUPPORT STRUCTURE FOR THE STROBE / LOCATOR LIGHT TO BE MOUNTED 96" AFF.

GRAPHIC SCALE(S)

1/4" = 1' - 0" — 0, 1', 5', 10', 15'

1/16" = 1' - 0" — 0, 5', 10', 20', 30', 60'

UNCW
UNIVERSITY of NORTH CAROLINA WILMINGTON
601 S COLLEGE ROAD
WILMINGTON, NORTH CAROLINA 28403

PARKING DECK II AND SURFACE PARKING (DESIGN-BUILD)
SOUTH CAMPUS - 4965 RIEGEL ROAD

SCO ID NUMBER: 18-19226-01A
CODE: 41828
ITEM: 301

CONTRACTOR
Balfour Beatty Construction

DESIGNER
CLARKNEXSEN
1523 ELIZABETH AVENUE, SUITE 300
CHARLOTTE, NORTH CAROLINA 28204
704·377·8800
CLARK NEXSEN LICENSE NUMBER: C-1028

WALKER CONSULTANTS
13860 Ballantyne Corporate Place
Suite 140
Charlotte, NC 28277
T: 704.247.6230
www.walkerconsultants.com
NC License No. F-0518

McKIM&CREED
CIVIL ENGINEER
243 NORTH FRONT STREET
WILMINGTON, NORTH CAROLINA
28401
910.343.1048

PROFESSIONAL SEAL

NOT FOR CONSTRUCTION

NC CORPORATE ENGINEERING LICENSE #C-1028

SUBMITTAL
04/15/2019
CONSTRUCTION DOCUMENT SUBMITTAL 01

REVISIONS

KEY PLAN

SHEET
FIRST LEVEL - LIGHTING, POWER AND SYSTEMS PLAN

E-101

DESIGN: JE
DRAWN: KAW
REVIEW: WAZ

CN 8112

4/12/2019 2:11:34 PM
C:\Revit Projects\8112_UNCW Parking Deck II E17_Benton.David@clarknexsen.com.rvt

GENERAL NOTES

1. PROVIDE EMERGENCY LIGHTING AND SIGNAGE AS REQUIRED BY LOCAL CODES TO ILLUMINATE AND IDENTIFY EGRESS PATHS UTILIZING THE CENTRAL LIGHTING INVERTER. WIRING FROM EMERGENCY SOURCE DISTRIBUTION OVERCURRENT PROTECTION TO EMERGENCY LOADS SHALL BE KEPT ENTIRELY INDEPENDENT OF ALL OTHER WIRING AND EQUIPMENT AND SHALL NOT ENTER THE SAME RACEWAY, CABLE BOX OR CABINET WITH OTHER WIRING.
2. CONDUITS ARE TO BE LOCATED IN THE GARAGE INTERIOR TO MINIMIZE VISUAL IMPACT. DO NOT ROUTE CONDUITS ON THE EXTERIOR OF ANY PART OF THE STRUCTURE. FIXTURES LOCATED ON THE EXTERIOR OF THE STRUCTURE ARE TO BE FED FROM BEHIND WITH NO CONDUIT VISABLE FROM THE OUTSIDE.
3. ALL RECEPTACLES SHALL BE GFI TYPE, UNLESS OTHERWISE NOTED. ALL RECEPTACLES EXCEPT THOSE IN ENCLOSED ROOMS SHALL HAVE WEATHERPROOF WHILE-IN-USE COVERS.

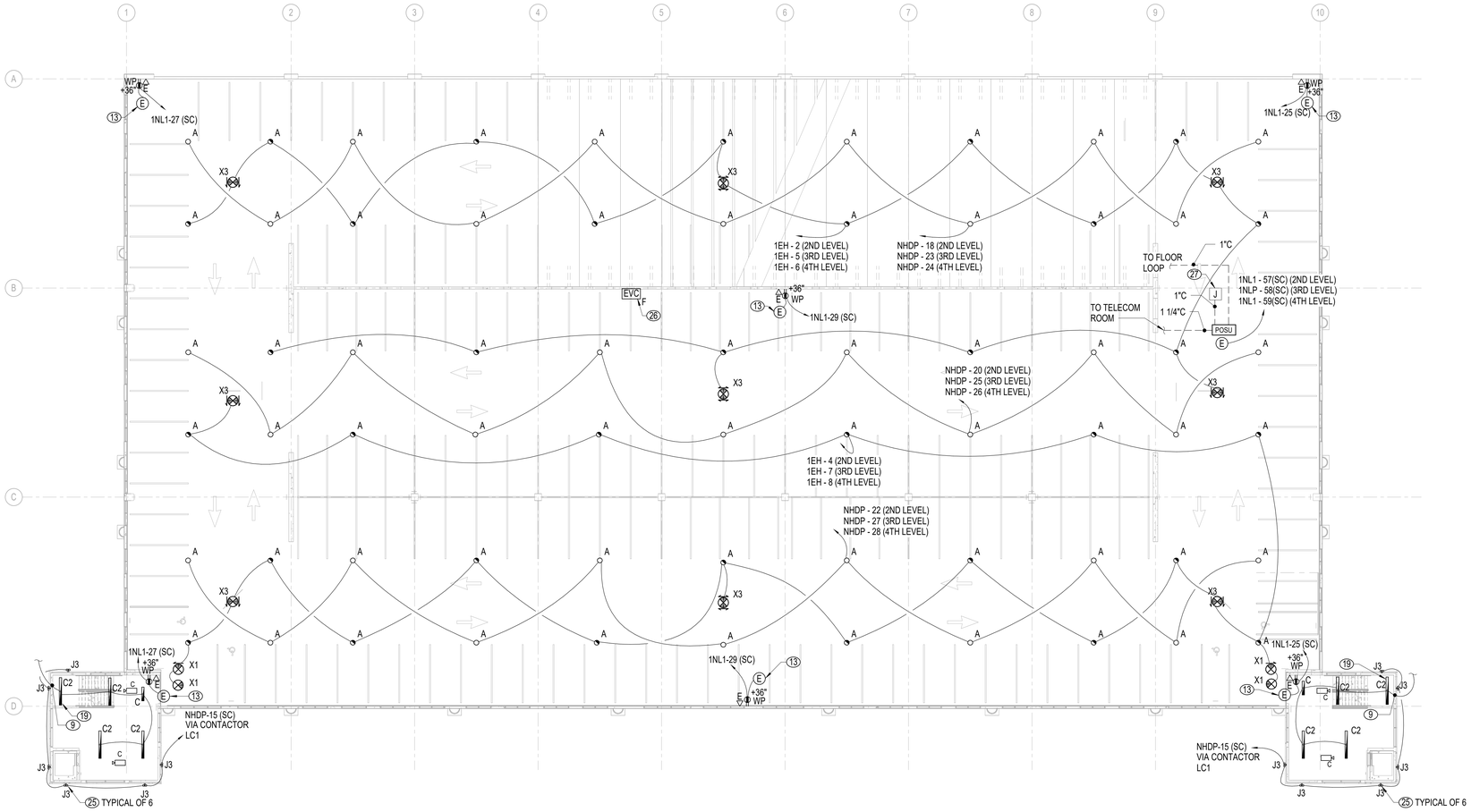

1 TYPICAL LEVELS SECOND-FOURTH - LIGHTING, POWER, AND SYSTEMS PLAN
1/16" = 1'-0"

NOTES

1. ELEVATION MOTOR FUSED DISCONNECT. FUSE PER MANUFACTURER'S RECOMMENDATION. REFER TO RISER DIAGRAM E-600 FOR ADDITIONAL INFORMATION. DISCONNECT SHALL BE LOCKABLE IN THE OPEN POSITION.
2. ELEVATOR CAB LIGHT AND CONTROL FUSED DISCONNECT. PROVIDE 120V, 30A, 20A FUSE LOCKABLE IN THE OPEN POSITION.
3. PROVIDE (1) VOICE LINE FOR EACH ELEVATOR. FIELD COORDINATE SPECIFICS AND FINAL LOCATION WITH ELEVATOR SUPPLIER.
4. SUMP PUMP CONTROLLER. COORDINATE LOCATION WITH SUMP PUMP SUPPLIER.
5. PROVIDE NEMA L6-20R, 208V, TWIST-LOCK STYLE RECEPTACLE. LOCATE BELOW THE PROPOSED TELECOMMUNICATIONS CABINET. REFER TO DRAWING E-600 FOR CABINET REQUIREMENTS.
6. PROVIDE NEMA-5-20R, 120V, 20A, RECEPTCACLE. LOCATE BELOW THE PROPOSED WALL MOUNT TELECOMMUNICATIONS CABINET. REFER TO DRAWING E-600 FOR CABINET REQUIREMENTS.
7. VOICE LINE FOR FIRE ALARM DIGITAL COMMUNICATOR. COORDINATE SPECIFICS WITH FIRE ALARM SYSTEM SUPPLIER.
8. CONNECT TO STAIR LUMINAIRE ON TIER ABOVE.
9. CONNECT TO STAIR LUMINAIRE ON TIER ABOVE AND TIER BELOW.
10. CONNECT TO STAIR LUMINAIRE ON TIER BELOW.
11. (2) 4" INCOMING TELECOM CONDUITS FROM MANHOLE MH-14A5. REFER TO DRAWING ES101 FOR CONTINUATION.
12. REFER TO LUMINAIRE SCHEDULE FOR MOUNTING SPECIFICS OF LUMINAIRE LOCATED AT TOP OF ELEVATOR SHAFT.
13. PROVIDE CONNECTION TO EMERGENCY PHONE. EXTEND 2#12, 1#12,3/4"C FROM RECEPTACLE JUNCTION BOX TO BUTTON OF CALL BOX.
14. DAYLIGHT SENSOR FOR DAYLIGHT HARVESTING. PROVIDE ONE SENSOR PER STAIR TOWER AND CONNECT TO FOUR (3) TYPE C2 AND (1) TYPE C LUMINAIRES ON EACH TIER AND (2) TYPE C2 AND (2) TYPE C LUMINAIRS ON THE TOP TIER FIFTH LEVEL. LOCATE SENSOR ON GROUND TIER LEVEL PER MANUFACTURER RECOMMENDATIONS. DO NOT CONNECT LAMINAR TYPE C2 AT THE STAIR LOWER LANDING TO THE DAYLIGHT SENSOR.
15. COORDINATE ANCHOR BOLT PATTERN OF POLE WITH DECK MANUFACTURER PRIOR TO ORDERING POLE. COORDINATE DRILL PATTERN AND BOLT PATTERN OF LUMINAIRE MOUNT WITH POLE MANUFACTURER PRIOR TO ORDERING POLE.
16. BOND LIGHT POLE WITH #4 BARE COPPER WIRE TO BASE OF COLUMN'S VERTICAL REINFORCING BARS (IF NOT LESS THAN 1/2" IN DIAMETER), INSTALLED IN MULTIPLE PIECES AND CONNECTED TOGETHER BY THE USUAL STEEL TIE WIRES, WELDING, EXOTHERMIC WELDING, OR OTHER EFFECTIVE MEANS TO CREATE A CONTINUOUS PATH TO EARTH.
17. COORDINATE STEEL VERTICAL REINFORCING BAR CONNECTION TO ENSURE CONTINUOUS PATH TO EARTH WITH CONTRACTOR PRIOR TO CONCRETE IS POURED FOR EACH LIGHT POLE LOCATION.
18. PROVIDE CONNECTION TO HEATED BACKFLOW AND IRRIGATION ENCLOSURE. IRRIGATION CONTROLLER, AND ASSOCIATED HEAT TRACING. COORDINATE CONNECTION REQUIREMENT WITH EQUIPMENT INSTALLER. REFER TO SITE DRAWING CG100 AND PLUMBING DRAWINGS P101 AND P201 FOR LOCATION.
19. CONNECT LUMINAIRE A HEAD OF LOCAL CONTROL
20. GROUND TRIAD, LOCATE MINIMUM 5' FROM BUILDING. EXTEND 1-1/4"C FROM GROUND TEST WELL TO MAIN GROUND ROD LOCATED IN THE ELECTRICAL ROOM 1104 (MGB). INSTALL CONDUIT MINIMUM 30" BELOW FINISHED GRADE. REFER TO DETAILS 1 AND 2 DRAWING E-500 FOR ADDITIONAL REQUIREMENT
21. PHOTOCELL FOR BRANCH CIRCUITS VIA LIGHTING CONTACTOR LC1. MOUNT PHOTOCELL UNDER ROOF EAVE OF STAIR TOWER. ORIENT FACING NORTH.
22. MOUNT A COPY OF THE ELECTRICAL POWER RISER DIAGRAM, UNDER CLEAR PROTECTIVE MATERIAL AT THIS LOCATION.
23. PROVIDE NEMA1 SCREW-OVER WIREWAY, 8" WIDE X 8" HIGH X 36" LONG FOR SITE LIGHTING UNDERGROUND CONDUIT TERMINATIONS. MOUNT 24" AFF.
24. TYPE J1 AND J2 CONNECTED V/A LIGHTING CONTACTOR LC1 LUMINAIRES SHALL NOT BE PROVIDED WITH INTEGRAL PHOTOCELL. REFER TO LUMINAIRE SCHEDULE'S NOTES.
25. MOUNT LUMINAIRE AT 17' AFF TO CENTER. COORDINATE LOCATION WITH ARCHITECTURAL DRAWINGS. REFER TO LUMINAIRE SCHEDULE FOR ADDITIONAL INFORMATION.
26. JUNCTION BOXES FOR FUTURE ELECTRIC VEHICLE CHARGER. REFER TO SYMBOL LEGEND FOR ADDITIONAL INFORMATION. TYPICAL FOR SECOND AND THIRD LEVELS ONLY.
27. PROVIDE TWO-GANG JUNCTION BOX FOR CONNECTION TO VEHICLE COUNTING SENSORS. EXTEND LOW VOLTAGE CABLE 1" CONDUIT TO EACH SENSOR AND MAKE CONNECTIONS. COORDINATE LOCATION WITH STRUCTURAL DRAWINGS AG401 AND AG402 AND SYSTEM VENDOR.
28. PROVIDE TWO-GANG JUNCTION BOX FOR CONNECTION TO LIGHTED SIGNS HANGING FROM BOTTOM OF DOUBLE TEES OVER EACH LANE (GREEN ARROW / X) AND EXTERIOR LIGHTED SIGNS, (ENTER/ EXIT) OVER EACH LANE. COORDINATE SIGNAGE LOCATION WITH STRUCTURAL DRAWINGS, AG401 AND AG402 AND SYSTEM VENDOR. EXTEND LOW VOLTAGE CABLE IN 1" CONDUIT TO EACH SIGN.
29. PROVIDE TWO-GANG JUNCTION BOX FOR CONNECTION TO LIGHTED SIGNS HANGING FROM BOTTOM OF DOUBLE TEES OVER EACH LANE (GREEN ARROW / X). COORDINATE SIGNAGE LOCATION WITH STRUCTURAL DRAWINGS, AG401 AND AG402 AND SYSTEM VENDOR. EXTEND LOW VOLTAGE CABLE IN 1" CONDUIT TO EACH SIGN.
30. REFER TO DETAIL 9 DRAWING E-500 FOR POWER AND DATA REQUIREMENTS.
31. EXTEND (1) 1" CONDUIT UNDERGROUND FROM WEATHERPROOF JUNCTION BOX TO ELECTRICAL ROOM PANEL 1NL1 SECTION II FOR FUTURE GATE AND TERMINATE AT BOTH ENDS. MOUNT JUNCTION BOX 12" AFF PROVIDE WEATHERPROOF COVER PLATE AND LABEL.
32. EXTEND (1) 1-1/2" CONDUIT UNDERGROUND FROM WEATHERPROOF JUNCTION BOX TO TELECOM ROOM EAST WALL FOR FUTURE GATE. MOUNT JUNCTION BOX 10" AFG, PROVIDE WEATHERPROOF COVER PLATE AND LABEL. STUB-UP CONDUIT IN TELECOM ROOM 10" AFF.
33. REFER TO ARCHITECTURAL CURTAIN WALL DETAIL DRAWING FOR EXIT SIGN MOUNTING LOCATION.
34. EXTEND (1) 1" CONDUIT FOR POWER AND (1) 1" CONDUIT FOR DATA, SAME AS NOTES 31 AND 32 EXCEPT FOR FUTURE PAY BY SPACE MACHINE. COORDINATE FINAL LOCATION WITH UNCW PRIOR TO INSTALLATION.
35. PROVIDE HEAVY DUTY NEMA 4X, 240 V, 30 AMP NON-FUSED DISCONNECT FOR BOOSTER PUMP. EXTEND 3#8, 1#8 G, 1" CONDUIT UNDERGROUND FROM DISCONNECT TO PANEL 1NL1 SECTION II TO CIRCUIT INDICATED, AND EXTEND 3#12, 1#12 G, 3/4" CONDUIT FROM DISCONNECT TO PUMP AND MAKE CONNECTIONS. PUMP HEATED ENCLOSURE SHALL BE CONNECTED TO THE BACKFLOW HEATED ENCLOSURE CIRCUIT 1NL1-12 AT THIS LOCATION. REFER TO KEY NOTE 18 FOR ADDITIONAL INFORMATION.
36. MOUNT RECEPTACLE 12" AFF IN REAR WALL.
37. PROVIDE SUPPORT STRUCTURE FOR THE STROBE / LOCATOR LIGHT TO BE MOUNTED 96" AFF.

GRAPHIC SCALE(S)

1/16" = 1' - 0" 0 5' 10' 20' 30' 60'

UNCW
UNIVERSITY of NORTH CAROLINA WILMINGTON
601 S COLLEGE ROAD
WILMINGTON, NORTH CAROLINA 28403

PARKING DECK II AND SURFACE PARKING (DESIGN-BUILD)
SOUTH CAMPUS - 4965 RIEGEL ROAD

SCO ID NUMBER: 18-19226-01A
CODE: 41828
ITEM: 301

CONTRACTOR
Balfour Beatty Construction

DESIGNER

CLARKNEXSEN
1523 ELIZABETH AVENUE, SUITE 300
CHARLOTTE, NORTH CAROLINA 28204
704·377·8800

CLARK NEXSEN LICENSE NUMBER: C-1028

WALKER CONSULTANTS
13860 Ballantyne Corporate Place
Suite 140
Charlotte, NC 28277
T: 704.247.6230
www.walkerconsultants.com
NC License No. F-0518

McKIM&CREED
CIVIL ENGINEER
243 NORTH FRONT STREET
WILMINGTON, NORTH CAROLINA
28401
910.343.1048

PROFESSIONAL SEAL
NOT FOR CONSTRUCTION
CLARK NEXSEN CERT NO. 50680 NORTH CAROLINA
NORTH CAROLINA PROFESSIONAL SEAL 027766 ENGINEER
NC CORPORATE ENGINEERING LICENSE #C-1028

SUBMITTAL
04/15/2019
CONSTRUCTION DOCUMENT SUBMITTAL 01

REVISIONS

KEY PLAN

SHEET
TYPICAL LEVELS SECOND-FOURTH - LIGHTING, POWER AND SYSTEMS PLAN

E-102

DESIGN: JE
DRAWN: KAW
REVIEW: WAZ

CN 8112

4/12/2019 2:11:38 PM
C:\Revit Projects\8112_UNCW Parking Deck II E17_Benton.Davis@clarknexsen.com.rvt

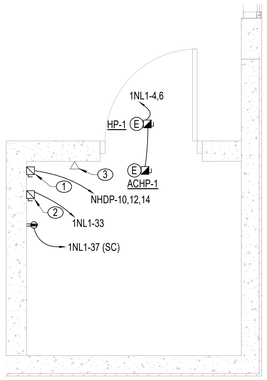

2 ENLARGED SOUTHWEST ELEVATOR CLOSET POWER PLAN
1/2" = 1'-0"

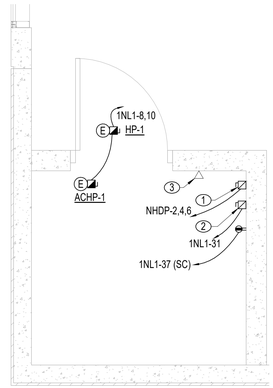

3 ENLARGED SOUTHEAST ELEVATOR CLOSET POWER PLAN
1/2" = 1'-0"

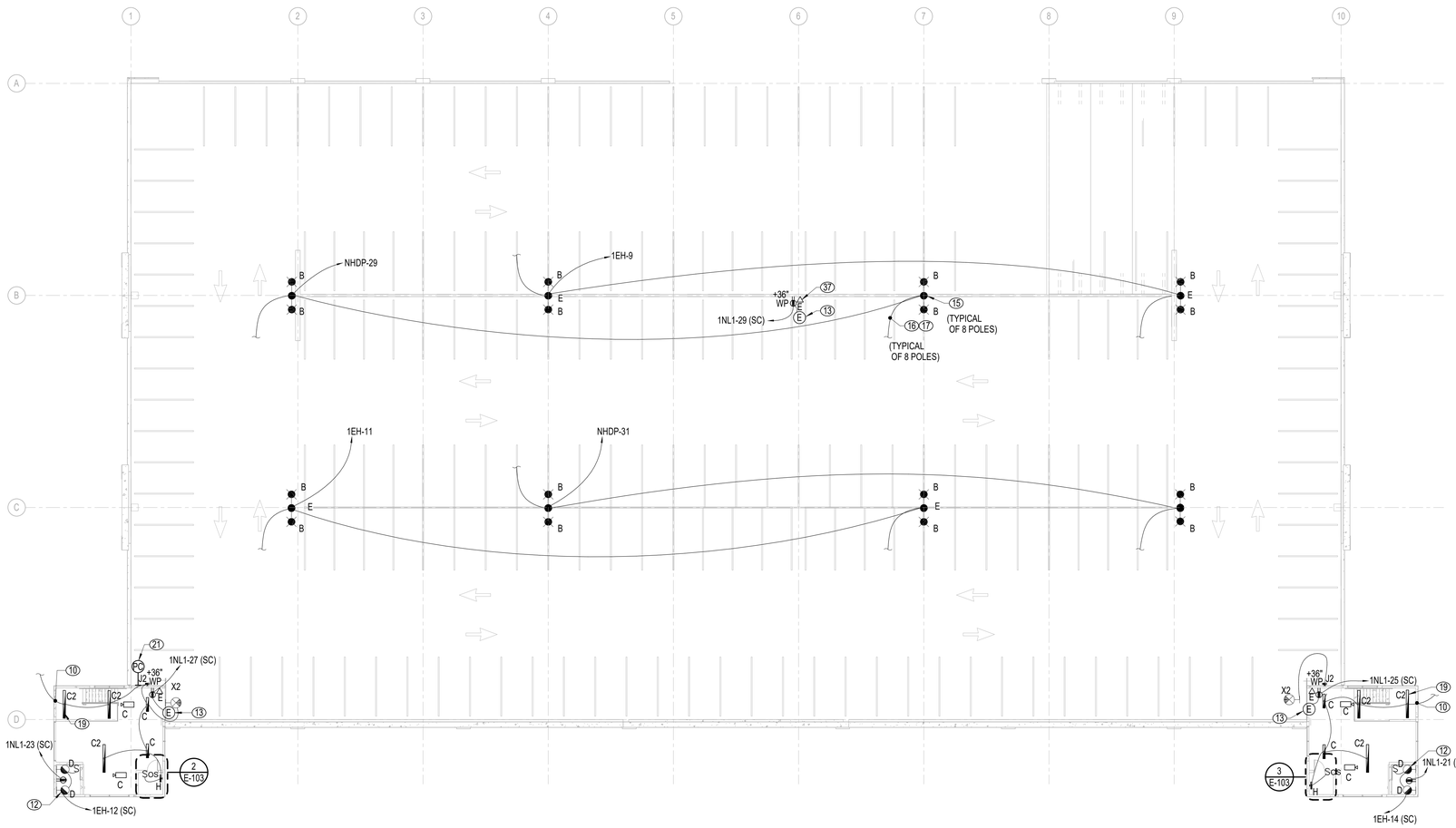

1 FIFTH LEVEL - LIGHTING, POWER, AND SYSTEMS PLAN
1/16" = 1'-0"

GENERAL NOTES

1. PROVIDE EMERGENCY LIGHTING AND SIGNAGE AS REQUIRED BY LOCAL CODES TO ILLUMINATE AND IDENTIFY EGRESS PATHS UTILIZING THE CENTRAL LIGHTING INVERTER. WIRING FROM EMERGENCY SOURCE DISTRIBUTION OVERCURRENT PROTECTION TO EMERGENCY LOADS SHALL BE KEPT ENTIRELY INDEPENDENT OF ALL OTHER WIRING AND EQUIPMENT AND SHALL NOT ENTER THE SAME RACEWAY, CABLE BOX OR CABINET WITH OTHER WIRING.
2. CONDUITS ARE TO BE LOCATED IN THE GARAGE INTERIOR TO MINIMIZE VISUAL IMPACT. DO NOT ROUTE CONDUITS ON THE EXTERIOR OF ANY PART OF THE STRUCTURE. FIXTURES LOCATED ON THE EXTERIOR OF THE STRUCTURE ARE TO BE FED FROM BEHIND WITH NO CONDUIT VISABLE FROM THE OUTSIDE.
3. ALL RECEPTACLES SHALL BE GFI TYPE, UNLESS OTHERWISE NOTED. ALL RECEPTACLES EXCEPT THOSE IN ENCLOSED ROOMS SHALL HAVE WEATHERPROOF WHILE-IN-USE COVERS.

NOTES

1. ELEVATION MOTOR FUSED DISCONNECT. FUSE PER MANUFACTURER'S RECOMMENDATION. REFER TO RISER DIAGRAM E-600 FOR ADDITIONAL INFORMATION. DISCONNECT SHALL BE LOCKABLE IN THE OPEN POSITION.
2. ELEVATOR CAB LIGHT AND CONTROL FUSED DISCONNECT. PROVIDE 120V, 30A, 20A FUSE LOCKABLE IN THE OPEN POSITION.
3. PROVIDE (1) VOICE LINE FOR EACH ELEVATOR. FIELD COORDINATE SPECIFICS AND FINAL LOCATION WITH ELEVATOR SUPPLIER.
4. SUMP PUMP CONTROLLER. COORDINATE LOCATION WITH SUMP PUMP SUPPLIER.
5. PROVIDE NEMA L6-20R, 208V, TWIST-LOCK STYLE RECEPTACLE. LOCATE BELOW THE PROPOSED TELECOMMUNICATIONS CABINET. REFER TO DRAWING E-600 FOR CABINET REQUIREMENTS.
6. PROVIDE NEMA-5-20R, 120V, 20A, RECEPTCACLE. LOCATE BELOW THE PROPOSED WALL MOUNT TELECOMMUNICATIONS CABINET. REFER TO DRAWING E-600 FOR CABINET REQUIREMENTS.
7. VOICE LINE FOR FIRE ALARM DIGITAL COMMUNICATOR. COORDINATE SPECIFICS WITH FIRE ALARM SYSTEM SUPPLIER.
8. CONNECT TO STAIR LUMINAIRE ON TIER ABOVE.
9. CONNECT TO STAIR LUMINAIRE ON TIER ABOVE AND TIER BELOW.
10. CONNECT TO STAIR LUMINAIRE ON TIER BELOW.
11. (2) 4" INCOMING TELECOM CONDUITS FROM MANHOLE MH-14A5. REFER TO DRAWING ES101 FOR CONTINUATION.
12. REFER TO LUMINAIRE SCHEDULE FOR MOUNTING SPECIFICS OF LUMINAIRE LOCATED AT TOP OF ELEVATOR SHAFT.
13. PROVIDE CONNECTION TO EMERGENCY PHONE. EXTEND 2#12, 1#12,3/4"C FROM RECEPTACLE JUNCTION BOX TO BUTTON OF CALL BOX.
14. DAYLIGHT SENSOR FOR DAYLIGHT HARVESTING. PROVIDE ONE SENSOR PER STAIR TOWER AND CONNECT TO FOUR (3) TYPE C2 AND (1) TYPE C LUMINAIRES ON EACH TIER AND (2) TYPE C2 AND (2) TYPE C LUMINAIRS ON THE TOP TIER FIFTH LEVEL. LOCATE SENSOR ON GROUND TIER LEVEL PER MANUFACTURER RECOMMENDATIONS. DO NOT CONNECT LAMINAR TYPE C2 AT THE STAIR LOWER LANDING TO THE DAYLIGHT SENSOR.
15. COORDINATE ANCHOR BOLT PATTERN OF POLE WITH DECK MANUFACTURER PRIOR TO ORDERING POLE. COORDINATE DRILL PATTERN AND BOLT PATTERN OF LUMINAIRE MOUNT WITH POLE MANUFACTURER PRIOR TO ORDERING POLE.
16. BOND LIGHT POLE WITH #4 BARE COPPER WIRE TO BASE OF COLUMN'S VERTICAL REINFORCING BARS (IF NOT LESS THAN 1/2" IN DIAMETER), INSTALLED IN MULTIPLE PIECES AND CONNECTED TOGETHER BY THE USUAL STEEL TIE WIRES, WELDING, EXOTHERMIC WELDING, OR OTHER EFFECTIVE MEANS TO CREATE A CONTINUOUS PATH TO EARTH.
17. COORDINATE STEEL VERTICAL REINFORCING BAR CONNECTION TO ENSURE CONTINUOUS PATH TO EARTH WITH CONTRACTOR PRIOR TO CONCRETE IS POURED FOR EACH LIGHT POLE LOCATION.
18. PROVIDE CONNECTION TO HEATED BACKFLOW AND IRRIGATION ENCLOSURE. IRRIGATION CONTROLLER, AND ASSOCIATED HEAT TRACING. COORDINATE CONNECTION REQUIREMENT WITH EQUIPMENT INSTALLER. REFER TO SITE DRAWING CG100 AND PLUMBING DRAWINGS P101 AND P201 FOR LOCATION.
19. CONNECT LUMINAIRE A HEAD OF LOCAL CONTROL
20. GROUND TRIAD, LOCATE MINIMUM 5' FROM BUILDING. EXTEND 1-1/4"C FROM GROUND TEST WELL TO MAIN GROUND ROD LOCATED IN THE ELECTRICAL ROOM 1104 (MGB). INSTALL CONDUIT MINIMUM 30" BELOW FINISHED GRADE. REFER TO DETAILS 1 AND 2 DRAWING E-500 FOR ADDITIONAL REQUIREMENT
21. PHOTOCELL FOR BRANCH CIRCUITS VIA LIGHTING CONTACTOR LC1. MOUNT PHOTOCELL UNDER ROOF EAVE OF STAIR TOWER. ORIENT FACING NORTH.
22. MOUNT A COPY OF THE ELECTRICAL POWER RISER DIAGRAM, UNDER CLEAR PROTECTIVE MATERIAL AT THIS LOCATION.
23. PROVIDE NEMA1 SCREW-OVER WIREWAY, 8" WIDE X 8" HIGH X 36" LONG FOR SITE LIGHTING UNDERGROUND CONDUIT TERMINATIONS. MOUNT 24" AFF.
24. TYPE J1 AND J2 CONNECTED VIA LIGHTING CONTACTOR LC1 LUMINAIRES SHALL NOT BE PROVIDED WITH INTEGRAL PHOTOCELL. REFER TO LUMINAIRE SCHEDULE'S NOTES.
25. MOUNT LUMINAIRE AT 17' AFF TO CENTER. COORDINATE LOCATION WITH ARCHITECTURAL DRAWINGS. REFER TO LUMINAIRE SCHEDULE FOR ADDITIONAL INFORMATION.
26. JUNCTION BOXES FOR FUTURE ELECTRIC VEHICLE CHARGER. REFER TO SYMBOL LEGEND FOR ADDITIONAL INFORMATION. TYPICAL FOR SECOND AND THIRD LEVELS ONLY.
27. PROVIDE TWO-GANG JUNCTION BOX FOR CONNECTION TO VEHICLE COUNTING SENSORS. EXTEND LOW VOLTAGE CABLE 1" CONDUIT TO EACH SENSOR AND MAKE CONNECTIONS. COORDINATE LOCATION WITH STRUCTURAL DRAWINGS AG401 AND AG402 AND SYSTEM VENDOR.
28. PROVIDE TWO-GANG JUNCTION BOX FOR CONNECTION TO LIGHTED SIGNS HANGING FROM BOTTOM OF DOUBLE TEES OVER EACH LANE (GREEN ARROW / X) AND EXTERIOR LIGHTED SIGNS, (ENTER/ EXIT) OVER EACH LANE. COORDINATE SIGNAGE LOCATION WITH STRUCTURAL DRAWINGS, AG401 AND AG402 AND SYSTEM VENDOR. EXTEND LOW VOLTAGE CABLE IN 1" CONDUIT TO EACH SIGN.
29. PROVIDE TWO-GANG JUNCTION BOX FOR CONNECTION TO LIGHTED SIGNS HANGING FROM BOTTOM OF DOUBLE TEES OVER EACH LANE (GREEN ARROW / X). COORDINATE SIGNAGE LOCATION WITH STRUCTURAL DRAWINGS, AG401 AND AG402 AND SYSTEM VENDOR. EXTEND LOW VOLTAGE CABLE IN 1" CONDUIT TO EACH SIGN.
30. REFER TO DETAIL 9 DRAWING E-500 FOR POWER AND DATA REQUIREMENTS.
31. EXTEND (1) 1" CONDUIT UNDERGROUND FROM WEATHERPROOF JUNCTION BOX TO ELECTRICAL ROOM PANEL 1NL1 SECTION II FOR FUTURE GATE AND TERMINATE AT BOTH ENDS. MOUNT JUNCTION BOX 12" AFF PROVIDE WEATHERPROOF COVER PLATE AND LABEL.
32. EXTEND (1) 1-1/2" CONDUIT UNDERGROUND FROM WEATHERPROOF JUNCTION BOX TO TELECOM ROOM EAST WALL FOR FUTURE GATE. MOUNT JUNCTION BOX 10" AFG, PROVIDE WEATHERPROOF COVER PLATE AND LABEL. STUB-UP CONDUIT IN TELECOM ROOM 10" AFF.
33. REFER TO ARCHITECTURAL CURTAIN WALL DETAIL DRAWING FOR EXIT SIGN MOUNTING LOCATION.
34. EXTEND (1) 1" CONDUIT FOR POWER AND (1) 1" CONDUIT FOR DATA, SAME AS NOTES 31 AND 32 EXCEPT FOR FUTURE PAY BY SPACE MACHINE. COORDINATE FINAL LOCATION WITH UNCW PRIOR TO INSTALLATION.
35. PROVIDE HEAVY DUTY NEMA 4X, 240 V, 30 AMP NON-FUSED DISCONNECT FOR BOOSTER PUMP. EXTEND 3#8, 1#8 G, 1" CONDUIT UNDERGROUND FROM DISCONNECT TO PANEL 1NL1 SECTION II TO CIRCUIT INDICATED, AND EXTEND 3#12, 1#12 G, 3/4" CONDUIT FROM DISCONNECT TO PUMP AND MAKE CONNECTIONS. PUMP HEATED ENCLOSURE SHALL BE CONNECTED TO THE BACKFLOW HEATED ENCLOSURE CIRCUIT 1NL1-12 AT THIS LOCATION. REFER TO KEY NOTE 18 FOR ADDITIONAL INFORMATION.
36. MOUNT RECEPTACLE 12" AFF IN REAR WALL.
37. PROVIDE SUPPORT STRUCTURE FOR THE STROBE / LOCATOR LIGHT TO BE MOUNTED 96" AFF.

GRAPHIC SCALE(S)

1/2" = 1' - 0" 0 6" 1' 2' 3' 4' 5'

1/16" = 1' - 0" 0 5' 10' 20' 30' 60'

UNCW
UNIVERSITY of NORTH CAROLINA WILMINGTON
601 S COLLEGE ROAD
WILMINGTON, NORTH CAROLINA 28403

PARKING DECK II AND SURFACE PARKING (DESIGN-BUILD)
SOUTH CAMPUS - 4965 RIEGEL ROAD

SCO ID NUMBER: 18-19226-01A
CODE: 41828
ITEM: 301

CONTRACTOR
Balfour Beatty Construction

DESIGNER
CLARKNEXSEN
1523 ELIZABETH AVENUE, SUITE 300
CHARLOTTE, NORTH CAROLINA 28204
704·377·8800
CLARK NEXSEN LICENSE NUMBER: C-1028

WALKER CONSULTANTS
13860 Ballantyne Corporate Place
Suite 140
Charlotte, NC 28277
T: 704.247.6230
www.walkerconsultants.com
NC License No. F-0518

McKIM&CREED
CIVIL ENGINEER
243 NORTH FRONT STREET
WILMINGTON, NORTH CAROLINA
28401
910.343.1048

PROFESSIONAL SEAL

NOT FOR CONSTRUCTION
CLARK NEXSEN CERT NO. 50680 NORTH CAROLINA
NORTH CAROLINA PROFESSIONAL SEAL 027766 ENGINEER

NC CORPORATE ENGINEERING LICENSE #C-1028

SUBMITTAL
04/15/2019
CONSTRUCTION DOCUMENT SUBMITTAL 01

REVISIONS

KEY PLAN

SHEET
FIFTH LEVEL - LIGHTING, POWER AND SYSTEMS PLAN

E-103

DESIGN: JE
DRAWN: KAW
REVIEW: WAZ

CN 8112

4/12/2019 2:11:39 PM
C:\Revit Projects\8112_UNCW Parking Deck II E17_Benton.Davis@clarknexsen.com.rvt

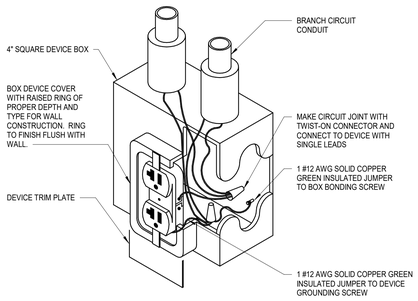

8 RECEPTACLE GROUNDING DETAIL
NO SCALE

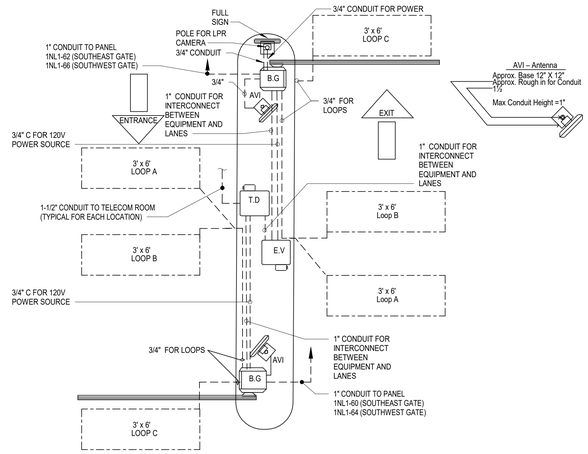

DETAIL LEGEND
B.G - BARRIER GATE
T.D - TICKET DISPENSER (OPTION: W/BARCODE, PROX, MAG)
E.V - EXIT VERIFIER/CC OUT (OPTION: W/BARCODE, PROX, MAG)
AVI - ANTENNA/READER
P.B - PROTECTION BOLLARD
LPR - LICENSE PLATE RECOGNITION

9 ENLARGED ENTRANCE GATE WIRING DETAIL (SOUTHEAST AND SOUTHWEST)
NO SCALE

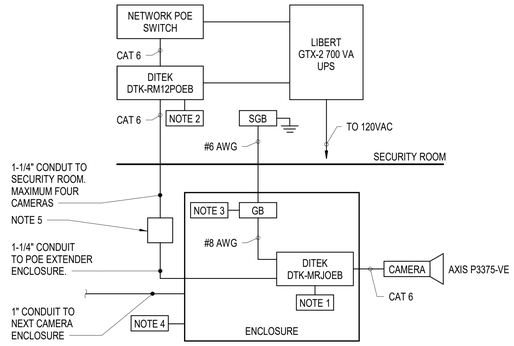

1. PROVIDE CAT 6 SURGE PROTECTOR (DTK- MRJPOE) IN AN ENCLOSURE LOCATED WITHIN 6 FEET OF EACH CAMERA.
2. PROVIDE RACK MOUNTED DITEK DTK-RM12POE 12 PORT SURGE PROTECTION PATCH PANEL. SURGE PROTECTION PATCH PANEL SHALL BE GROUNDED USING #8 AWG WIRE TO SGB.
3. PROVIDE GROUND BAR IN ENCLOSURE TO PROVIDE A CONNECTION TO GROUND FOR CAMERA SURGE PROTECTORS. THE DISTANCE BETWEEN THE DITEK MRJPOE MODULES AND GROUND SHOULD BE LESS THAN THE CABLE DISTANCE BETWEEN THE MODULE AND THE CAMERA IT PROTECTS. PROVIDE #6 AWG, GREEN, INSULATED, AND STRANDED GROUND CONDUCTOR FROM SGB IN THE SECURITY ROOM TO GROUND BAR. PROVIDE #8 AWG, GREEN, INSULATED, AND STRANDED GROUND CONDUCTOR FROM GROUND BAR TO EACH CAMERA SURGE PROTECTOR.
4. PROVIDE HINGED ENCLOSURE LOCATED WITHIN 6 FEET OF EACH CAMERA TO HOUSE DTK-MRJPOEB AND GROUND BAR. HINGED ENCLOSURE SHALL BE 8" SQUARE AND 6" DEEP.
5. PROVIDE 18" x 18" x 6" DEEP HINGED ENCLOSURE FOR POE EXTENDER (AXIS MODEL# T8129-E). INSTALL ENCLOSURE AT MAXIMUM 250 FEET FROM SECURITY ROOM TO EACH HOME RUN. PROVIDE ONE POE EXTENDER PER EACH CAT6 CABLE AND LABEL.

10 CAMERA STANDARDS DETAIL
NO SCALE

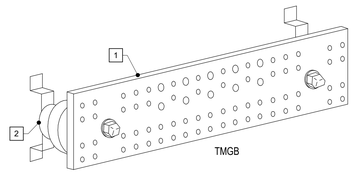

NOTES:

1. COPPER GROUND BAR, DOUBLE LUG CONFIGURATION; TMGB 1/4 X 4" X 24". UL LISTED WITH PRE DRILLED HOLES IN BICSI PATTERN.
2. STANDOFF BRACKET ASSEMBLY WITH INSULATORS, TYPICAL FOR TWO.

5 TELECOMMUNICATIONS GROUNDING BUSBAR DETAILS
NO SCALE

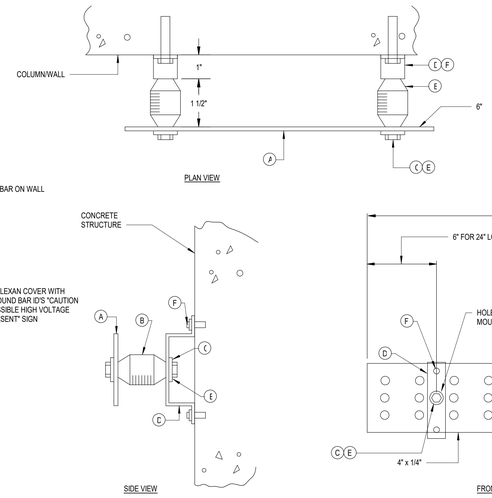

(A) COPPER GROUND BAR
(B) INSULATORS
(C) 3/8" LOCKWASHERS
(D) WALL MOUNTING BRACKET
(E) 3/8 = 11x1" HEX CAP SCREW BOLT
(F) PROVIDE APPROPRIATE EXPANSION SHIELDS & BOLTS FOR MOUNTING ON CONCRETE STRUCTURE

GENERAL NOTES:

1. PROVIDE THREE HOLES SUITABLE FOR NEMA SPACING FOR #1/0 THROUGH 500 KCMIL 2 HOLE COMPRESSION CONNECTORS.
2. PROVIDE 1/4" LEXAN COVER WITH GROUND BAR ID'S "CAUTION POSSIBLE HIGH VOLTAGE PRESENT" SIGN.
3. PROVIDE 50% SPARE HOLES FOR EACH GROUND BAR.

6 ELECTRICAL GROUNDING BUSBAR DETAIL
NO SCALE

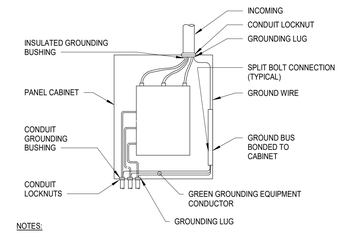

NOTES:

1. WIRES TO BE NEATLY LACED.
2. AT THE POINT OF ATTACHMENT OF THE GROUNDING LUG TO THE CABINET, THE SURFACES SHALL BE SCRAPED FREE OF PAINT AND THOROUGHLY CLEANED TO INSURE PROPER BONDING.
3. NEUTRAL CONDUCTOR NOT SHOWN FOR CLARITY.

7 TYPICAL PANEL GROUNDING
NO SCALE

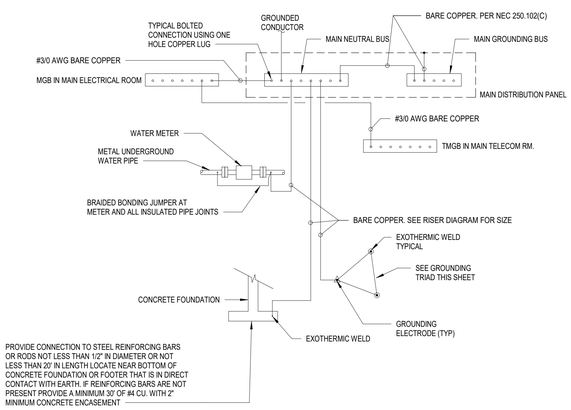

NOTES:

1. GROUNDING ELECTRODE SYSTEM. CONFORM TO NEC ARTICLE 250.

1 GROUNDING SYSTEM DETAIL
NO SCALE

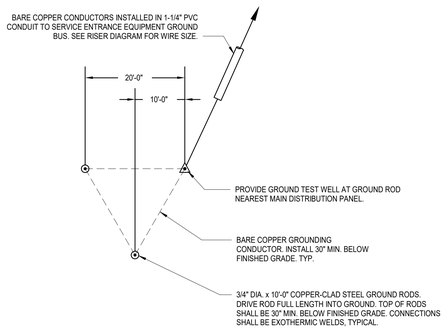

2 GROUNDING TRIAD
NO SCALE

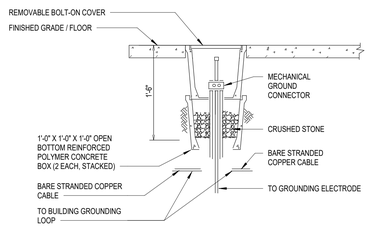

3 GROUNDING TEST WELL
NO SCALE

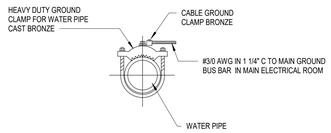

4 GROUND CABLE CONNECTION TO WATER PIPE
NO SCALE

UNCW
UNIVERSITY of NORTH CAROLINA WILMINGTON
601 S COLLEGE ROAD
WILMINGTON, NORTH CAROLINA 28403

PARKING DECK II AND SURFACE PARKING (DESIGN-BUILD)
SOUTH CAMPUS - 4965 RIEGEL ROAD

SCO ID NUMBER: 18-19226-01A
CODE: 41828
ITEM: 301

CONTRACTOR
Balfour Beatty Construction

DESIGNER

CLARKNEXSEN
1523 ELIZABETH AVENUE, SUITE 300
CHARLOTTE, NORTH CAROLINA 28204
704·377·8800
CLARK NEXSEN LICENSE NUMBER: C-1028

WALKER CONSULTANTS
13860 Ballantyne Corporate Place
Suite 140
Charlotte, NC 28277
T: 704.247.6230
www.walkerconsultants.com
NC License No. F-0518

McKIM&CREED
CIVIL ENGINEER
243 NORTH FRONT STREET
WILMINGTON, NORTH CAROLINA
28401
910.343.1048

PROFESSIONAL SEAL
NOT FOR CONSTRUCTION
CLARK NEXSEN CERT NO. 50680 NORTH CAROLINA
NORTH CAROLINA PROFESSIONAL SEAL 027766 ENGINEER
NC CORPORATE ENGINEERING LICENSE #C-1028

SUBMITTAL
04/15/2019
CONSTRUCTION DOCUMENT SUBMITTAL 01

REVISIONS

KEY PLAN

SHEET
ELECTRICAL DETAILS

E-500

DESIGN: WAZ
DRAWN: KAW
REVIEW: WAZ

CN 8112

4/12/2019 2:11:42 PM
C:\Revit Projects\8112_UNCW Parking Deck II E17_Benton.Davis@clarknexsen.com.rvt

FEEDER SCHEDULE

DESIGNATION	NO. OF SETS	CONDUCTORS PHASE	CONDUCTORS NEUTRAL	CONDUCTORS GROUND	CONDUIT	NOTES
40	1	3#8	1#8	#8	1"	COPPER
40BS	1	3#6	1#6	#8	1"	COPPER
40VD	1	3#6	1#6	#8	1"	COPPER
50B	1	3#4	1#4	#8	1-1/4"	COPPER
110D	1	3#1	-	1#6	1-1/4"	COPPER
150Y	1	3#1/0	1#1/0	1#6	1-1/2"	COPPER
250TS	1	3-250 KCMIL	1-250 KCMIL	1#2	3"	COPPER
250US	1	3-300 KCMIL	1-300 KCMIL	-	4" (1-4" SPARE)	COPPER

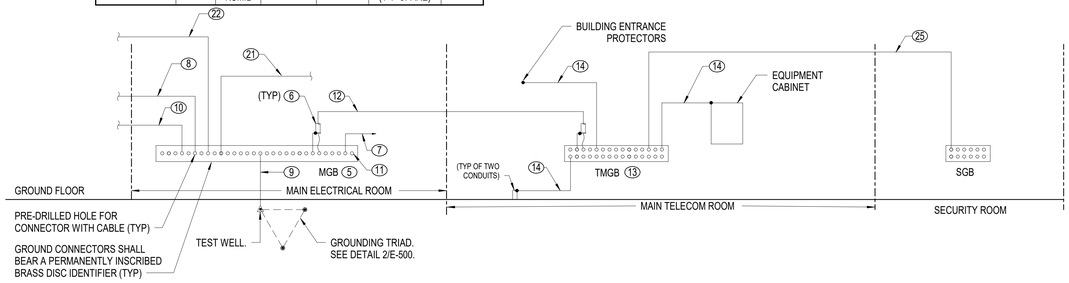

3 POWER & TELECOM GROUNDING RISER
NO SCALE

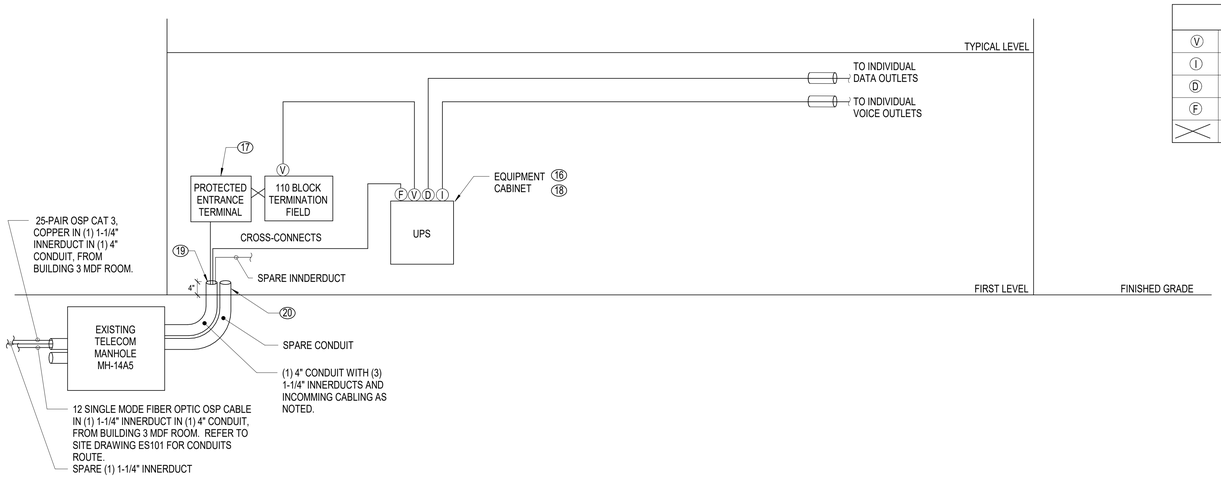

CABLE LEGEND

V	PUNCH-DOWN TERMINATION FOR VOICE, CATEGORY 6
I	PATCH PANEL TERMINATION FOR VOICE (VOIP), CATEGORY 6
D	PATCH PANEL TERMINATION FOR DATA, CATEGORY 6
F	LC TERMINATIONS FOR FIBER OPTIC CABLE AT FIBER ENCLOSURE
X	CROSS CONNECT CABLING, CATEGORY 6

2 TELECOM RISER DIAGRAM
NO SCALE

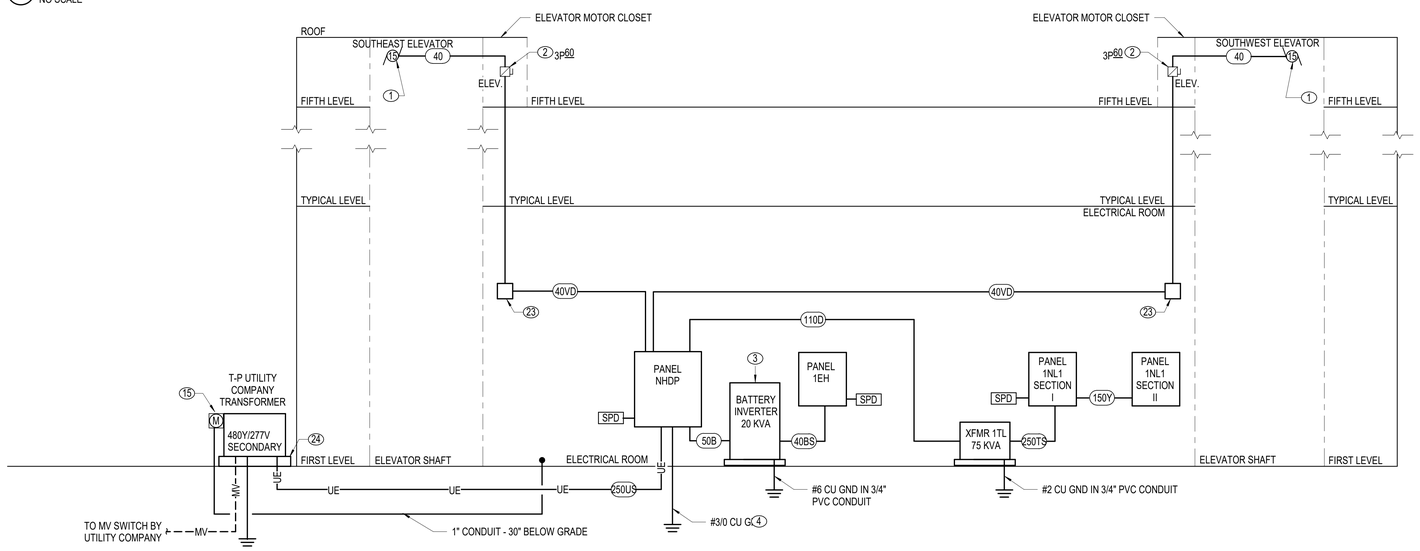

1 POWER RISER DIAGRAM
NO SCALE

GENERAL NOTES

1. FOR SITE PLAN AND DETAILS REFER TO DRAWING ES101, ES501 AND ES502.
2. FOR ELECTRICAL DETAILS REFER TO DRAWING E-500.

NOTES

1 COORDINATE ELEVATOR REQUIREMENTS WITH SPECIFICATION SECTION 142100 AND ELEVATOR SUPPLIER.

2 HEAVY DUTY FUSE DISCONNECT. PROVIDE WITH CURRENT LIMITING CLASS RK1 FUSES, AND RATING PER MANUFACTURER RECOMMENDATION. DISCONNECT SHALL BE EQUIPPED WITH TWO AUXILIARY CONTACTS THAT ARE POSITIVELY OPENED WHEN POWER IS REMOVED FROM THE ELEVATOR SYSTEM.

3 THREE-PHASE CENTRAL LIGHTING INVERTER, DOUBLE CONVERSION, 24 KW, 480Y/ 277V INPUT, 480Y/277V OUTPUT. PROVIDE WITH SIESMIC FLOOR KIT. PROVIDE FULL SELECTIVE COORDINATION OF THE EMERGENCY SYSTEM PER NEC-700.28 REQUIREMENT. EMERGENCY SYSTEM OVERCURRENT DEVICES SHALL BE SELECTIVELY COORDINATED WITH ALL SUPPLY SIDE OVERCURRENT PROTECTIVE DEVICES. INVERTER INPUT AND OUTPUT BREAKERS SHALL BE LSI TYPE. PROVIDE BREAKER FRAMES AND SENSOR UNITS PER THE COORDINATION STUDY RESULTS, AND TRIP UNITS AS INDICATED ON THE DRAWING. (INVERTER INPUT BREAKER AND OUTPUT BREAKER SHALL BE MINIMUM 18 KAIC). SEE SPECIFICATION SECTION 260573 FOR SELECTIVE COORDINATION REQUIREMENT. INVERTER SHALL COMPLY WITH UL 924, NFPA 101 AND NFPA 70. CRUCIAL POWER PRODUCTS MODEL# WR030H09LHT3-VA (OR APPROVED EQUAL).

4 REFER TO GROUNDING SYSTEM DETAIL 1/E-500 FOR GROUNDING REQUIREMENTS.

5 MAIN GROUNDING BUSBAR (MGB) 24". (SEE DETAIL 6 ON DRAWING E-500)

6 RUN GROUNDING ELECTRODE CONDUCTOR BETWEEN THE MAIN AND LOCAL GROUND BUS BARS IN CONDUIT. BOND THE METAL CONDUIT AT EACH END TO THE GROUND BUS BARS.

7 RUN ONE #10 AWG IN 3/4"C TO FIRE ALARM PANELS. (REFER TO FA DRAWINGS FOR LOCATION OF FIRE ALARM PANELS)

8 RUN ONE #3/0 AWG IN 1-1/4"C TO MAIN WATER PIPE. (REFER TO PUMBING DRAWINGS FOR LOCATION OF MAIN WATER PIPE)

9 RUN ONE #3/0 IN 1-1/4"C TO GROUNDING TRIAD.

10 BOND THE INTERIOR METALLIC PIPING TO THE GROUNDING SYSTEM PROVIDE A BONDING JUMPER ACROSS THE WATER METER. (SEE PLUMBING DRAWINGS FOR LOCATION OF WATER METER)

11 PROVIDE 50% SPARE HOLES. (TYP FOR ALL GROUND BUS BARS)

12 GROUNDING CONDUCTORS BETWEEN THE MGB AND THE TMGB SHALL BE #3/0 AWG, UON. CONNECT GROUNDING CONDUCTORS USING COMPRESSION CONNECTORS.

13 TELECOMMUNICATIONS MAIN GROUNDING BUSBAR (TMGB). (SEE DETAIL 5 ON DRAWING E-500)

14 #6 AWG BONDING JUMPER.

15 NEW PAD MOUNTED TRANSFORMER, METER BASE, CURRENT TRANSFORMERS (CT'S) AND REQUIRED METER SHALL BE PROVIDED AND INSTALLED BY UTILITY COMPANY. CONTRACTOR SHALL INSTALL ONE 1" EMPTY CONDUIT FROM METER BASE TO ELECTRICAL ROOM FOR INTERFACE WITH BUILDING MANAGEMENT SYSTEM. WIRING FROM METER BASE BY UNCW IT. TERMINATE CONDUIT 12" AFF NEAR PANEL NHDP. REFER TO SITE DRAWINGS FOR ADDITIONAL INFORMATION.

16 WALL MOUNT TELECOMMUNICATIONS ENCLOSURE "CUBE-IT PLUS" CABINET, EQUIVALENT TO CHATSWORTH PRODUCTS INC. (CPI) PART #11840-736, 24" WIDTH X 24" DEPTH X 36" HEIGHT, STEEL, METAL DOOR, BLACK, WITH 19" EIA MOUNTING RAIL. PROVIDE A PUSHBUTTON LOCK BOX FOR ENCLOSURE'S KEYS STORAGE , AND MOUNT TO THE OUTSIDE OF THE WALL MOUNT ENCLOSURE.

17 MOUNT PROTECTED ENTRANCE TERMINAL IN THE BACK OF THE WALL MOUNT ENCLOSURE AND LINK TO THE TERMINATION POINT.

18 CABINET UPS WILL BE PROVIDED BY UNCW-IT.

19 PROVIDE HOLE PLUG DESIGNED TO SEAL. AROUND EACH INDIVIDUAL INNERDUCT AND SEALED TO PREVENT LEAKAGE INTO THE BUILDING

20 SEAL ALL DUCTS AT TERMINATIONS OR ALL CONDUIT ENTRY POINTS WITH EXPANDABLE REUSABLE CONDUIT PLUGS CAPABLE OF WITHSTANDING 15-PSI MINIMUM HYDRO STATIC PRESSURE IN MANHOLE AND BUILDING.

21 TO ELECTRICAL EQUIPMENT, TRANSFORMER, BATTERY INVERTER. REFER TO POWER RISER DIAGRAM FOR CONDUCTOR SIZES AND QUANTITY.

22 BOND EXPOSED METAL FRAME WORK AT EACH STAIR WITH MINIMUM #2 AWG IN 3/4" CONDUIT.

23 PROVIDE 6" SQUARE PULL BOX BETWEEN THE HORIZONTAL AND VERTICAL CONDUIT RUN AND AS REQUIRED PER CODE.

24 REFER TO DETAIL 7 DRAWING ES501 FOR TRANSFORMER CONCRETE PAD WORKING CLEARANCE REQUIREMENTS AND SECONDARY CONDUIT TERMINATION.

25 GROUNDING CONDUCTOR BETWEEN THE TMGB AND SGB SHALL BE MINIMUM #4 AWG, UON. CONNECT GROUNDING CONDUCTORS USING COMPRESSION CONNECTORS.

UNCW
UNIVERSITY of NORTH CAROLINA WILMINGTON
601 S COLLEGE ROAD
WILMINGTON, NORTH CAROLINA 28403

PARKING DECK II AND SURFACE PARKING (DESIGN-BUILD)
SOUTH CAMPUS - 4965 RIEGEL ROAD

SCO ID NUMBER: 18-19226-01A
CODE: 41828
ITEM: 301

CONTRACTOR
Balfour Beatty Construction

DESIGNER

CLARKNEXSEN
1523 ELIZABETH AVENUE, SUITE 300
CHARLOTTE, NORTH CAROLINA 28204
704·377·8800
CLARK NEXSEN LICENSE NUMBER: C-1028

WALKER CONSULTANTS
13860 Ballantyne Corporate Place
Suite 140
Charlotte, NC 28277
T: 704.247.6230
www.walkerconsultants.com
NC License No. F-0518

McKIM&CREED
CIVIL ENGINEER
243 NORTH FRONT STREET
WILMINGTON, NORTH CAROLINA
28401
910.343.1048

PROFESSIONAL SEAL
NOT FOR CONSTRUCTION
CLARK NEXSEN CERT NO. 50680 NORTH CAROLINA
NORTH CAROLINA PROFESSIONAL SEAL 027786 ENGINEER
NC CORPORATE ENGINEERING LICENSE #C-1028

SUBMITTAL
04/15/2019
CONSTRUCTION DOCUMENT SUBMITTAL 01

REVISIONS

KEY PLAN

SHEET
RISER DIAGRAMS

E-600

DESIGN: WAZ
DRAWN: KAW
REVIEW: WAZ

CN 8112

4/12/2019 2:11:44 PM
C:\Revit Projects\8112_UNCW Parking Deck II E17_Benton.Davis@clarknexsen.com.rvt

LUMINAIRE SCHEDULE

TYPE	DESCRIPTION	MANUFACTURER	MODEL NO.	LAMPS TYPE	VOLTAGE	POWER	MOUNTING	NOTES
A	17" DIAMETER LED LUMINAIRE WITH TYPE V DISTRIBUTION, TEXTURED POLYCARBONATE LENS, LIGHT GRAY FINISH, INTEGRAL DRIVER, FUSING, INTEGRAL OCCUPANCY SENSOR AND PHOTOCELL (SUFFIX "TL50").	KENALL OR EQUIVALENT	TD17-QM-5S-TP-LG-72L-40K8-DCC-DV-FS-TL50	LED	277 V	78 VA	SURFACE	
B	23" DIAMETER LED LUMINAIRE WITH TYPE V DISTRIBUTION, WIDE, TEXTURED CLEAR POLYCARBONATE LENS, LIGHT GRAY FINISH, INTEGRAL DRIVER, FUSING, INTEGRAL OCCUPANCY SENSOR AND PHOTOCELL (SUFFIX "TL50"). MOUNTED ON A 25'-0" HINGED POLE. POLE TO BE PROVIDED WITH A DAMPER PER MANUFACTURER RECOMMENDATIONS.	KENALL OR EQUIVALENT POLE: KW INDUSTRIES OR EQUIVALENT	TPD23-5S-TP-LG-295L40K-DCC-DV-FS-TMA-TW180-TL50 POLE: THSP25-7.15-7-K841-DM2180-WPRP-BC- WITH THSP-LW-7.15 LOWERING WINCH	LED	277 V	325 VA	POLE MOUNTED	
C	8" X 4' LINEAR 0-10 VOLT DIMMABLE LED LUMINAIRE WITH MATTE WHITE FINISH, CLEAR POLYCARBONATE LENS, INTEGRAL DRIVER AND FUSING. LUMINAIRE STEMS ARE NOT PROVIDED WITH FIXTURE, CONTRACTOR TO PROVIDE.	KENALL OR EQUIVALENT	MLHA8-48-F-MW-CP-45L40K-DCC-1-DV-FS-PM	LED	277 V	49 VA	PENDANT MTD 10'-0" FROM BOTTOM OF FIXTURE TO AFF	
C2	8" X 8' LINEAR (TWO 4'-0" LUMINAIRES FACTORY CONNECTED) LED LUMINARIE WITH MATTE WHITE FINISH, CLEAR POLYCARBONATE LENS, INTEGRAL DRIVER AND FUSING. LUMINAIRE STEMS ARE NOT PROVIDED WITH FIXTURE, CONTRACTOR TO PROVIDE.	KENALL OR EQUIVALENT	MLHA96-F-MW-CP-45L40K-DCC-1-DV-FS-PM	LED	277 V	98 VA	PENDANT MTD 10'-0" FROM BOTTOM OF FIXTURE TO AFF.	
D	VAPORTITE LED LUMINAIRE WITH SILVER FINISH, WALL MOUNTED 36" ABOVE ELEVATOR PIT FLOOR AND AT TOP OF ELEVATOR SHAFT 4'-0" ABOVE MOTOR MAINTENANCE DECK HEIGHT. FIELD COORDINATE SPECIFICS WITH ELEVATOR SUPPLIER.	SPECTRUM OR EQUIVALENT	WJ1LW-20L-40K-EX-FJ1-CP104KO-PT	LED	277 V	16 VA	WALL	
H	2'-0" LINEAR LED STRIPLIGHT, WALL MOUNTED AND CENTERED ABOVE DOOR WITH WHITE STEEL FINISH, FROSTED ACRYLIC LENS AND ON/OFF DRIVER FUNCTION.	COLUMBIA OR EQUIVALENT	LCL2-40ML-EU	LED	277 V	24 VA	WALL	
J1	18" ARCHITECTURAL STYLE WALL PACK WITH SINGLE FUSE, TYPE IV FORWARD THROW DISTRIBUTION, GRAY FINISH AND INTEGRAL PHOTOCELL UON. CENTER OF FIXTURE WALL MOUNTED 10'-6" AFG.	KIM LIGHTING OR EQUIVALENT	WDM-D-48L-55-4K8-4F-UNV-LG-PC-SF	LED	277 V	55 VA	WALL MTD	DO NOT PROVIDE INTEGRAL PHOTO CELL FOR LUMINARES CONTROLLED VIA LIGHTING CONTACTOR
J2	13" ARCHITECTURAL STYLE WALL PACK WITH SINGLE FUSE, FORWARD THROW DISTRIBUTION, DIFFUSE LENS, GRAY FINISH AND INTEGRAL PHOTOCELL UON. CENTER OF FIXTURE WALL MOUNTED 10'-6" AFG.	KIM LIGHTING OR EQUIVALENT	WDS-D-24L-40-4K8-FTD-UNV-LG-PC-SF	LED	277 V	42 VA	WALL MTD	DO NOT PROVIDE INTEGRAL PHOTO CELL FOR LUMINARES CONTROLLED VIA LIGHTING CONTACTOR
J3	18" ARCHITECTURAL STYLE UP MOUNTING WALL PACK WITH SINGLE FUSE, TYPE SPOT/COLUMN DISTRIBUTION, GREY FINISH. MOUNT CENTER OF FIXTURE AT 17'-0" AFG.	KIM LIGHTING OR EQUIVALENT	WDM-U-48L-65-4K8-SP-UNV-LG-SF	LED	277 V	68 VA	WALL MTD	
P1	POST TOP LIGHT WITH TYPE V DISTRIBUTION, 6000 LUMEN OUTPUT, 5000K CCT, FROSTED GLASS AND BLACK FINISH. MOUNTED ON 14' BLACK POLE.	YAORONG POLE: GE LIGHTING SOLUTION OR EQUIVALENT	YR-TP300-W060 POLE: ARTA-14-3S-5.0-B-BL-T	LED	277 V	60 VA	MOUNTED ON 14' POLE	POLE SHALL BE UL LISTED. REFER TO DETAIL 1 / ES502.
P2	13.6" X 4" STREET LIGHT WITH TYPE III DISTRIBUTION, 24,600 LUMEN OUTPUT, 5000K CCT, AND BLACK FINISH. REUSE EXISTING POLE AND LIGHT.	FINTRONX	PLK-240-48-50K-A3M112--BL	LED	480 V	240 VA	POLE MOUNTED	REUSE EXISTING/ RELOCATED POLES. REFER TO DETAIL 2 / ES502.
X1	SINGLE FACE WET LABEL EXIT SIGN WITH RED LETTERS AND WHITE DIE-CAST ALUMINUM HOUSING. PROVIDE WITH PENDANT MOUNT KIT. SIGN TO BE MOUNTED A MINIMUM OF 8'-2" ABOVE FINISHED FLOOR TO BOTTOM OF EXIT SIGN WITH WORDING IN COMPLETE VIEW BELOW BEAMS.	DUAL-LITE OR EQUIVALENT	SEWL-SRW	LED	277 V	5 VA	PENDANT MTD 8'-2" TO BOTTOM OF SIGN MINIMUM	
X2	SINGLE FACE WET LABEL EXIT SIGN WITH RED LETTERS AND WHITE DIE-CAST HOUSING, FLAT WALL MOUNTED AND CENTERED ABOVE DOORS.	DUAL-LITE OR EQUIVALENT	SEWL-SRW	LED	277 V	5 VA	FLAT WALL	
X3	DOUBLED FACED EXIT SIGN WITH RED LETTERS AND WHITE DIE-CAST ALUMINUM HOUSING. PROVIDE WITH PENDANT MOUNT KIT AND CHEVRONS AS NOTED ON FLOOR PLANS. BE MOUNTED A MINIMUM OF 8'-2" ABOVE FINISHED FLOOR TO BOTTOM OF EXIT SIGN WITH WORDING IN COMPLETE VIEW BELOW BEAMS.	DUAL-LITE OR EQUIVALENT	SEWL-DRW	LED	277 V	5 VA	PENDANT MTD 8'-2" TO BOTTOM OF SIGN MINIMUM	

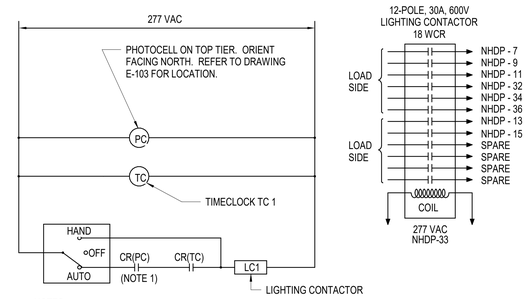

NOTES:
1. PHOTOCELL CONTACTS CLOSE AT DUSK, OPEN AT DAYBREAK.
2. LIGHTING CONTACTOR AND H.O.A. SELECTOR SWITCH SHALL BE PROVIDED WITH HINGED DOOR AND LOCKABLE COVER.
3. REFER TO DRAWING E-101 FOR EQUIPMENT LOCATIONS.

2 EXTERIOR NORMALLY POWERED LIGHTING CONTROL - VIA CONTACTOR (LC1)
NO SCALE

EQUIPMENT CONNECTION SCHEDULE

EQUIPMENT DESIGNATION			EQUIPMENT RATINGS							STARTER	DISCONNECT DATA		
EQUIPMENT DESIGNATION	LOCATION	DESCRIPTION	HP / WATTS	VOLT	PH	FLA	KVA	OCPD	TYPE	TYPE	RATING	OCPD
CU-1/AC-1	TELECOM AND SECURITY ROOMS	SPLIT SYSTEM	2300W	208	1	11.2	2.33	15		MAG	30	MANUF
CU-2/AC-2	ELECTRICAL ROOM	SPLIT SYSTEM	2300W	208	1	11.2	2.33	20		MAG	30	MANUF
UH-1	ELECTRICAL ROOM	UNIT HEATER	5000W	208	3	13.9	5.01	20		MAG	30	MANUF
SP-1	SOUTHEAST ELEVATOR SHAFT	SUMP PUMP	.5 HP	120	1	9.8	1.18	20		MRS	20	----
SP-2	SOUTHWEST ELEVATOR SHAFT	SUMP PUMP	.5 HP	120	1	9.8	1.18	20		MRS	20	----
FACP	ELECTRICAL ROOM	FIRE ALARM CONTROL UNIT	720W	120	1	6.0	0.72	20		----	----	----
HP-1/ACHP-1	ELEVATOR CLOSET	HEAT PUMP	3000W	208	1	14.4	3.00	30		MAG	30	MANUF
P-1	EXTERIOR	BOOSTER PUMP	2HP	208	3			20		NF	30	

ABBREVIATIONS

NF	NON-FUSED	MAG	MAGNETIC STARTER
MANUF.	PROVIDE IN ACCORDANCE WITH MANUFACTURER'S RECOMMENDATION		
MRS	MOTOR RATED SWITCH		
----	INDICATES NOT APPLICABLE		
MCCB	MOLDED CASE CIRCUIT BREAKER		

NOTE 1: CONDUIT SIZES BASED OF 40% FILL OF EMT. CONTRACTOR SHALL SIZE CONDUIT PER NEC IF CONDUIT OTHER THAN EMT IS USED.

PANEL NHDP SCHEDULE

250 AMP MCB 480Y/277 VOLTS 3PH, 4W, SN MIN. 18 KAIC SURFACE MOUNTED

CKT. NO.	LOAD DESCRIPTION	COND SIZE	WIRE SIZE	BKR TRIP	AMPS	KVA	PH	KVA	AMPS	BKR TRIP	WIRE SIZE	COND SIZE	LOAD DESCRIPTION	CKT. NO.
1	PANEL 1EH	1-1/4	4	50	28.2	7.8	A	5.8	21.0	40	*	*	SOUTHEAST ELEVATOR MOTOR	2
3	VIA BATTERY INVERTER				23.5	6.5	B	5.8	21.0					4
5	LSI TYPE, 100 A FRAME 50 A TRIP				14.0	3.9	C	5.8	21.0					6
7	EXTERIOR PEDESTRIAN LIGHTING	1-1/2	6	20	0.7	0.2	A			20			SPARE	8
9					0.7	0.2	B	5.8	21.0	40	*	*	SOUTHWEST ELEVATOR MOTOR	10
11					0.7	0.2	C	5.8	21.0					12
13	EXTERIOR BUILDING LIGHTING	3/4	10	20	2.2	0.6	A	5.8	21.0					14
15	EXTERIOR WALL WASH STAIR LIGHTING	3/4	10	20	3.3	0.8	B			20			SPARE	16
17	FIRST TIER LIGHTING	3/4	10	20	2.8	0.8	C	0.9	3.1	20	10	3/4	SECOND TIER LIGHTING	18
19	FIRST TIER LIGHTING	3/4	10	20	4.2	1.2	A	0.9	3.1	20	10	3/4	SECOND TIER LIGHTING	20
21	FIRST TIER LIGHTING	3/4	10	20	3.1	0.9	B	0.9	3.1	20	10	3/4	SECOND TIER LIGHTING	22
23	THIRD TIER LIGHTING	3/4	10	20	3.1	0.9	C	0.9	3.1	20	10	3/4	FOURTH TIER LIGHTING	24
25	THIRD TIER LIGHTING	3/4	10	20	3.1	0.9	A	0.9	3.1	20	10	3/4	FOURTH TIER LIGHTING	26
27	THIRD TIER LIGHTING	3/4	10	20	3.1	0.9	B	0.9	3.1	20	10	3/4	FOURTH TIER LIGHTING	28
29	FIFTH TIER LIGHTING	3/4	10	20	4.7	1.3	C	0.6	2.0	20	6	1-1/2	SITE EMERGENCY PHONE	30
31	FIFTH TIER LIGHTING	3/4	10	20	4.7	1.3	A	0.8	2.9	20	6	1-1/2	EXTERIOR PARKING LIGHTING	32
33	LC1 LIGHTING CONTACTOR COIL	3/4	12	20	0.7	0.2	B	0.8	2.9	2.9				34
35	SPARE			20			C	0.8	2.9					36
37	PANEL 1NL1 SECTION I	*	*	110	104.2	28.8	A			30	10	3/4	SPD (NOTE 1)	38
39	FED VIA XFMR 1TL (75 KVA)				101.6	28.1	B							40
41					109.8	30.4	C							42

TOTAL AMPS (CONN. LOAD) A: 198.3 B: 186.6 C: 188.2
TOTAL AMPS (FEEDTHRU) A: B: C:
TOTAL AMPS (CONN. LOAD + FEED-THRU) A: 198.3 B: 186.6 C: 188.2
PANELBOARD OPTIONS:
PANELBOARD NOTES:
* REFER TO RISER DIAGRAM SHEET E-600 FOR FEEDER AND CONDUIT SIZES.
1. BREAKER RATING AND WIRE SIZE MAY VARY BY MANUFACTURER. PROVIDE BREAKER AND WIRE SIZE IN ACCORDANCE WITH MANUFACTURER RECOMMENDATIONS.

LOAD DESCRIPTION	PANEL CONN LOAD		SUBFEED CONN LOAD		FEEDTHRU CONN LOAD		TOTAL LOAD		D.F. MULT.		TOTAL KVA DEMAND	
LIGHTING	17.5	KVA	19.4	KVA		KVA	36.9	KVA	1.25	NEC	46.1	KVA
RECEPTACLES		KVA	46.4	KVA		KVA	46.4	KVA		NEC	28.2	KVA
MECH EQUIP		KVA	18.0	KVA		KVA	18.0	KVA	1.00		18.0	KVA
ELECTRIC HEAT		KVA	5.1	KVA		KVA	5.1	KVA	1.25		6.4	KVA
MISCELLANEOUS	0.2	KVA	15.0	KVA		KVA	15.2	KVA	1.00		15.2	KVA
ELEVATOR	34.9	KVA		KVA		KVA	34.9	KVA	0.80		27.9	KVA
		KVA		KVA		KVA		KVA				KVA
		KVA		KVA		KVA		KVA				KVA
		KVA		KVA		KVA		KVA				KVA
		KVA		KVA		KVA		KVA				KVA
		KVA		KVA		KVA		KVA				KVA
		KVA		KVA		KVA		KVA				KVA
TOTALS (CONN. KVA)	52.7	KVA	103.9	KVA		KVA	156.5	KVA			141.9	KVA
TOTALS (CONN. KVA + 20%)	63.2	KVA	124.7	KVA		KVA	187.9	KVA			170.3	KVA
TOTALS (CONN. AMPS)	63.3	AMPS	125.0	AMPS		AMPS	188.3	AMPS			170.7	AMPS
TOTALS (CONN. AMPS + 20%)	76.0	AMPS	150.0	AMPS		AMPS	226.0	AMPS			204.8	AMPS

PANEL 1EH SCHEDULE

100 AMP MLO 480Y/277 VOLTS 3PH, 4W, SN MIN. 14 KAIC SURFACE MOUNTED

CKT. NO.	LOAD DESCRIPTION	COND SIZE	WIRE SIZE	BKR TRIP	AMPS	KVA	PH	KVA	AMPS	BKR TRIP	WIRE SIZE	COND SIZE	LOAD DESCRIPTION	CKT. NO.
1	FIRST TIER EMERGENCY LIGHTING	3/4	10	20	5.4	1.5	A	1.3	4.5	20	10	3/4	SECOND TIER EMERGENCY LIGHTING	2
3	FIRST TIER EMERGENCY LIGHTING	3/4	10	20	4.0	1.1	B	1.3	4.8	20	10	3/4	SECOND TIER EMERGENCY LIGHTING	4
5	THIRD TIER EMERGENCY LIGHTING	3/4	10	20	4.5	1.3	C	1.3	4.5	20	10	3/4	FOURTH TIER EMERGENCY LIGHTING	6
7	THIRD TIER EMERGENCY LIGHTING	3/4	10	20	4.8	1.3	A	1.3	4.8	20	10	3/4	FOURTH TIER EMERGENCY LIGHTING	8
9	FIFTH TIER EMERGENCY LIGHTING	3/4	10	20	4.7	1.3	B			20			SPARE	10
11	FIFTH TIER EMERGENCY LIGHTING	3/4	10	20	4.7	1.3	C	0.1	0.2	20	10	3/4	ELEVATOR SHAFT SOUTHWEST LIGHTS	12
13	STAIR TOWER SOUTHWEST	3/4	10	20	8.3	2.3	A	0.1	0.2	20	10	3/4	ELEVATOR SHAFT SOUTHEAST LIGHTS	14
15	STAIR TOWER SOUTHEAST	3/4	10	20	8.3	2.3	B	0.5	1.6	20	12	3/4	TELECOM/ELECTRICAL ROOM LIGHTS	16
17	SPARE			20			C			20			SPARE	18
19	SPARE			20			A			30	10	3/4	SPD (NOTE 1)	20
21	SPARE			20			B							22
23	SPARE			20			C							24

TOTAL AMPS (CONN. LOAD) A: 28.2 B: 23.5 C: 14.0
TOTAL AMPS (FEEDTHRU) A: B: C:
TOTAL AMPS (CONN. LOAD + FEED-THRU) A: 28.2 B: 23.5 C: 14.0
PANELBOARD OPTIONS:
PANELBOARD NOTES:
1. BREAKER RATING AND WIRE SIZE MAY VARY BY MANUFACTURER PROVIDE BREAKER AND WIRE SIZE IN ACCORDANCE WITH MANUFACTURER RECOMMENDATIONS.

PANEL 1NL1 SECTION I SCHEDULE

250 AMP MCB 208Y/120 VOLTS 3PH, 4W, SN MIN. 10 KAIC SURFACE MOUNTED

CKT. NO.	LOAD DESCRIPTION	COND SIZE	WIRE SIZE	BKR TRIP	AMPS	KVA	PH	KVA	AMPS	BKR TRIP	WIRE SIZE	COND SIZE	LOAD DESCRIPTION	CKT. NO.
1	TELECOM RM CU-1/AC-1	3/4	12	15	11.2	1.2	A	0.7	6.0	20	12	3/4	FIRE ALARM CONTROL PANEL (NOTE 2)	2
3					11.2	1.2	B	1.5	14.4	30	8	3/4	ELEVATOR CLOSET SOUTHWEST	4
5	ELECTRICAL RM CU-2/AC-2	3/4	12	20	11.2	1.2	C	1.5	14.4				HP-1/ACHP-1	6
7					11.2	1.2	A	1.5	14.4	30	8	3/4	ELEVATOR CLOSET SOUTHEAST	8
9	SPARE			20			B	1.5	14.4				HP-1/ACHP-1	10
11	SOUTHWEST ELEVATOR SHAFT SP-1	3/4	10	20	9.8	1.2	C	0.3	2.5	15	8	1	HTG. BACKFLOW PREVENTER EN2L.	12
13	HEAT TRACING (NOTE 3)	1	8	15	2.5	0.3	A			20			SPARE	14
15	SECURITY RM RECEPTACLE FOR BAS	3/4	12	20	3.0	0.4	B			20			SPARE	16
17	SECURITY RM RECEPTACLE	3/4	12	20	4.5	0.5	C	1.2	11.2	15	12	3/4	SECURITY RM CU-1/AC-1	18
19	SOUTHEAST ELEVATOR SHAFT SP-2	3/4	10	20	9.8	1.2	A	1.2	11.2					20
21	SOUTHEAST ELEVATOR SHAFT RECEPT	3/4	10	20	3.0	0.4	B	0.9	7.5	20	12	3/4	TELECOM RM RECEPTACLES	22
23	SOUTHWEST ELEVATOR SHAFT RECEPT	3/4	10	20	3.0	0.4	C	0.6	5.0	20	12	3/4	TELECOM RM RECEPT. GATE EQPMT	24
25	EAST RECEPTACLES AND PHONE	3/4	10	20	7.5	0.9	A	0.6	5.0	20	12	3/4	SECURITY RM RECEPT. CAMERAS EQPMT	26
27	WEST RECEPTACLES AND PHONE	3/4	10	20	9.0	1.1	B	0.4	3.0	20	12	3/4	ELECTRICAL RM RECEPTACLES	28
29	MIDLE RECEPTACLES AND PHONE	3/4	10	20	7.5	0.9	C	1.9	16.0	20	12	3/4	TELECOM RM RECEPTACLES	30
31	SOUTHEAST ELEVATOR CAB LIGHTS	3/4	10	20	2.0	0.2	A	19.6	163.0	150	*	*	PANEL 1NL1 SECTION II	32
33	SOUTHWEST ELEVATOR CAB LIGHTS	3/4	10	20	2.0	0.2	B	19.0	158.3					34
35	PARKING MANAGEMENT SITE SIGNAGE	1-1/2	8	20	3.0	0.4	C	18.8	157.0					36
37	ELEVATOR CLOSET RECEPTACLE	3/4	10	20	3.0	0.4	A			30	10	3/4	SPD (NOTE 1)	38
39	TELECOM RM RACK RECEPTACLES	3/4	12	20	16.0	1.7	B							40
41					16.0	1.7	C							42

TOTAL AMPS (CONN. LOAD) A: 240.4 B: 234.4 C: 253.4
TOTAL AMPS (FEEDTHRU) A: B: C:
TOTAL AMPS (CONN. LOAD + FEED-THRU) A: 240.4 B: 234.4 C: 253.4
PANELBOARD OPTIONS:
PANELBOARD NOTES:
* REFER TO RISER DIAGRAM SHEET E-600 FOR FEEDER AND CONDUIT SIZES.
1. BREAKER RATING AND WIRE SIZE MAY VARY BY MANUFACTURER. PROVIDE BREAKER AND WIRE SIZE IN ACCORDANCE WITH MANUFACTURER RECOMMENDATIONS.
2. PROVIDE WITH RED LOCKABLE HANDLE FOR THE FIRE ALARM EQUIPMENT AND LOCK IN THE "ON" POSITION.
3. PROVIDE "OFF" BREAKER FOR EQUIPMENT.

PANEL 1NL1 SECTION II SCHEDULE

225 AMP MLO 208Y/120 VOLTS 3PH, 4W, SN MIN. 10 KAIC SURFACE MOUNTED

CKT. NO.	LOAD DESCRIPTION	COND SIZE	WIRE SIZE	BKR TRIP	AMPS	KVA	PH	KVA	AMPS	BKR TRIP	WIRE SIZE	COND SIZE	LOAD DESCRIPTION	CKT. NO.
43	CHARGING STATION FUTURE			40	30.0	3.1	A	3.1	30.0	40	8	3/4	CHARGING STATION	44
45	SECOND TIER				30.0	3.1	B	3.1	30.0				FIRST TIER	46
47	CHARGING STATION FUTURE			40	30.0	3.1	C	3.1	30.0	40	8	3/4	CHARGING STATION	48
49	SECOND TIER				30.0	3.1	A	3.1	30.0				FIRST TIER	50
51	CHARGING STATION FUTURE			40	30.0	3.1	B	3.1	30.0	40			CHARGING STATION FUTURE	52
53	THIRD TIER				30.0	3.1	C	3.1	30.0				THIRD TIER	54
55	PARKING SYSTEM - SERVER POWER	3/4	10	20	16.0	1.9	A	1.4	11.3	20	10	3/4	PKG ASSIST SYSTEM - GROUND TIER	56
57	PKG ASSIST SYSTEM - SECOND TIER	3/4	10	20	11.3	1.4	B	1.4	11.3	20	10	3/4	PKG ASSIST SYSTEM - THIRD TIER	58
59	PKG ASSIST SYSTEM - FOURTH TIER	3/4	10	20	11.3	1.4	C	1.2	10.0	20	10	1	SOUTHEAST GATE	60
61	ELECTRICAL ROOM UH-1	3/4	12	20	14.2	1.7	A	1.2	10.0	20	10	1	SOUTHEAST GATE	62
63					14.2	1.7	B	1.2	10.0	20	10	1	SOUTHWEST GATE	64
65					14.2	1.7	C	1.2	10.0	20	10	1	SOUTHWEST GATE	66
67	BOOSTER PUMP EXTERIOR P-1	1	8	20	7.5	0.9	A			20			SPARE	68
69					7.5	0.9	B			20			SPARE	70
71					7.5	0.9	C						BUSSED SPACE	72
73	BUSSED SPACE						A						BUSSED SPACE	74
75	BUSSED SPACE						B						BUSSED SPACE	76
77	BUSSED SPACE						C						BUSSED SPACE	78
79	BUSSED SPACE						A						BUSSED SPACE	80
81	BUSSED SPACE						B						BUSSED SPACE	82
83	BUSSED SPACE						C						BUSSED SPACE	84

TOTAL AMPS (CONN. LOAD) A: 163.0 B: 158.3 C: 157.0
TOTAL AMPS (FEEDTHRU) A: B: C:
TOTAL AMPS (CONN. LOAD + FEED-THRU) A: 163.0 B: 158.3 C: 157.0
PANELBOARD OPTIONS:
PANELBOARD NOTES:

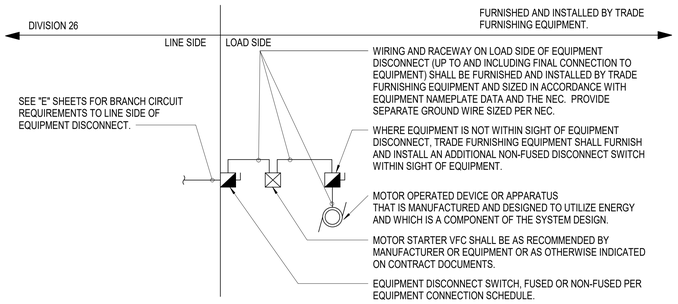

NOTE: REQUIREMENTS FOR WIRING, MATERIALS, METHODS, AND COMPONENTS SHALL BE PER DIVISION 26 SPECIFICATIONS.

1 DIVISION OF WORK DETAIL FOR DIVISIONS 23/26
NO SCALE

UNCW
UNIVERSITY of NORTH CAROLINA WILMINGTON
601 S COLLEGE ROAD
WILMINGTON, NORTH CAROLINA 28403

PARKING DECK II AND SURFACE PARKING (DESIGN-BUILD)
SOUTH CAMPUS - 4965 RIEGEL ROAD

SCO ID NUMBER: 18-19226-01A
CODE: 41828
ITEM: 301

CONTRACTOR
Balfour Beatty Construction

DESIGNER

CLARKNEXSEN
1523 ELIZABETH AVENUE, SUITE 300
CHARLOTTE, NORTH CAROLINA 28204
704.377.8800
CLARK NEXSEN LICENSE NUMBER: C-1028

WALKER CONSULTANTS
13860 Ballantyne Corporate Place
Suite 140
Charlotte, NC 28277
T: 704.247.6230
www.walkerconsultants.com
NC License No. F-0518

McKIM&CREED
CIVIL ENGINEER
243 NORTH FRONT STREET
WILMINGTON, NORTH CAROLINA
28401
910.343.1048

PROFESSIONAL SEAL
NOT FOR CONSTRUCTION
CLARK NEXSEN CERT NO. 50680 NORTH CAROLINA
NORTH CAROLINA PROFESSIONAL SEAL 027765 ENGINEER
NC CORPORATE ENGINEERING LICENSE #C-1028

SUBMITTAL
04/15/2019
CONSTRUCTION DOCUMENT SUBMITTAL 01

REVISIONS

KEY PLAN

SHEET
SCHEDULES

E-700

DESIGN: WAZ
DRAWN: KAW
REVIEW: WAZ

CN 8112

4/12/2019 2:11:48 PM
C:\Revit Projects\B172_UNCW Parking Deck II E17_Benton.Davis@clarknexsen.com.rvt

FIRE ALARM LEGEND

FACP	FIRE ALARM CONTROL PANEL
NAC	NOTIFICATION APPLIANCE CIRCUIT PANEL
(H)	HEAT DETECTOR, CEILING MOUNTED
(S)	SMOKE DETECTOR, CEILING MOUNTED
CM	CONTACT MONITOR MODULE
F	MANUAL PULL STATION, MOUNT 4'-0" AFF
DACT	DIGITAL ALARM COMMUNICATOR TRANSMITTER

ABBREVIATIONS

O.C.	ON CENTER
EP	ELECTRICAL POWER (120V AC)
WP	WEATHERPROOF / OUTDOOR RATED (SUBSCRIPT)
C	CEILING MOUNTED (SUBSCRIPT)
E	EXISTING (SUBSCRIPT)
FACP	FIRE ALARM CONTROL PANEL

GENERAL NOTES

1. DEDICATED FUNCTION FIRE ALARM SYSTEM SHALL BE INSTALLED IN ACCORDANCE WITH NFPA 72 - 2013 EDITION. PROVIDE WIRING AS RECOMMENDED BY MANUFACTURER.
2. COORDINATE FIRE ALARM SYSTEM WITH ALL TRADES TO ENSURE PROPER COMPLIANCE WITH CODES AND TO AVOID CONFLICTS.
3. IN AREAS WITH LAY-IN CEILING TILES, INSTALL CEILING MOUNTED FIRE ALARM DEVICES CENTER OF TILE.
4. NO PIPE PENETRATIONS OF STRUCTURAL MEMBERS, EXCEPT AS NOTED, ARE PERMITTED WITHOUT THE APPROVAL OF THE ARCHITECT/ENGINEER.
5. ALL FIRE ALARM APPLIANCES, DEVICES, BACKBOXES, AND JUNCTION BOXES MUST BE OUTDOOR RATED, INCLUDING ITEMS INSIDE OF ROOMS.

SYSTEM INPUT \ SYSTEM OUTPUT	ACTIVATE COMMON ALARM SIGNAL INDICATOR	ACTIVATE AUDIBLE ALARM SIGNAL	ACTIVATE COMMON SUPERVISORY SIGNAL INDICATOR	ACTIVATE AUDIBLE SUPERVISORY SIGNAL	ACTIVATE COMMON TROUBLE SIGNAL INDICATOR	ACTIVATE AUDIBLE TROUBLE SIGNAL	DISPLAY CHANGE OF STATUS	TRANSMIT ALARM SIGNAL TO RECEIVING STATION	TRANSMIT SUPERVISORY SIGNAL TO RECEIVING STATION	TRANSMIT TROUBLE SIGNAL TO RECEIVING STATION	RECALL ELEVATOR TO 1ST FLOOR	RECALL ELEVATOR TO 2ND FLOOR		ILLUMINATE FIRE HAT (FLASH)
MANUAL PULL STATION	●	●					●	●						
AREA SMOKE DETECTOR	●	●					●	●						
AREA SMOKE DETECTOR (ELEV. MACH. ROOM)	●	●					●	●			●			●
HEAT DETECTOR (1ST FLR ELEV. LANDING)	●	●					●	●				●		
HEAT DETECTOR (OTHER FLR ELEV. LANDING)	●	●					●	●			●			
STANDPIPE ISOLATION VALVE TAMPER SWITCH			●	●			●		●					
OPEN CIRCUIT					●	●	●			●				
GROUND FAULT					●	●	●			●				

1 DEDICATED FUNCTION FIRE ALARM SYSTEM SEQUENCE OF OPERATION MATRIX
NO SCALE

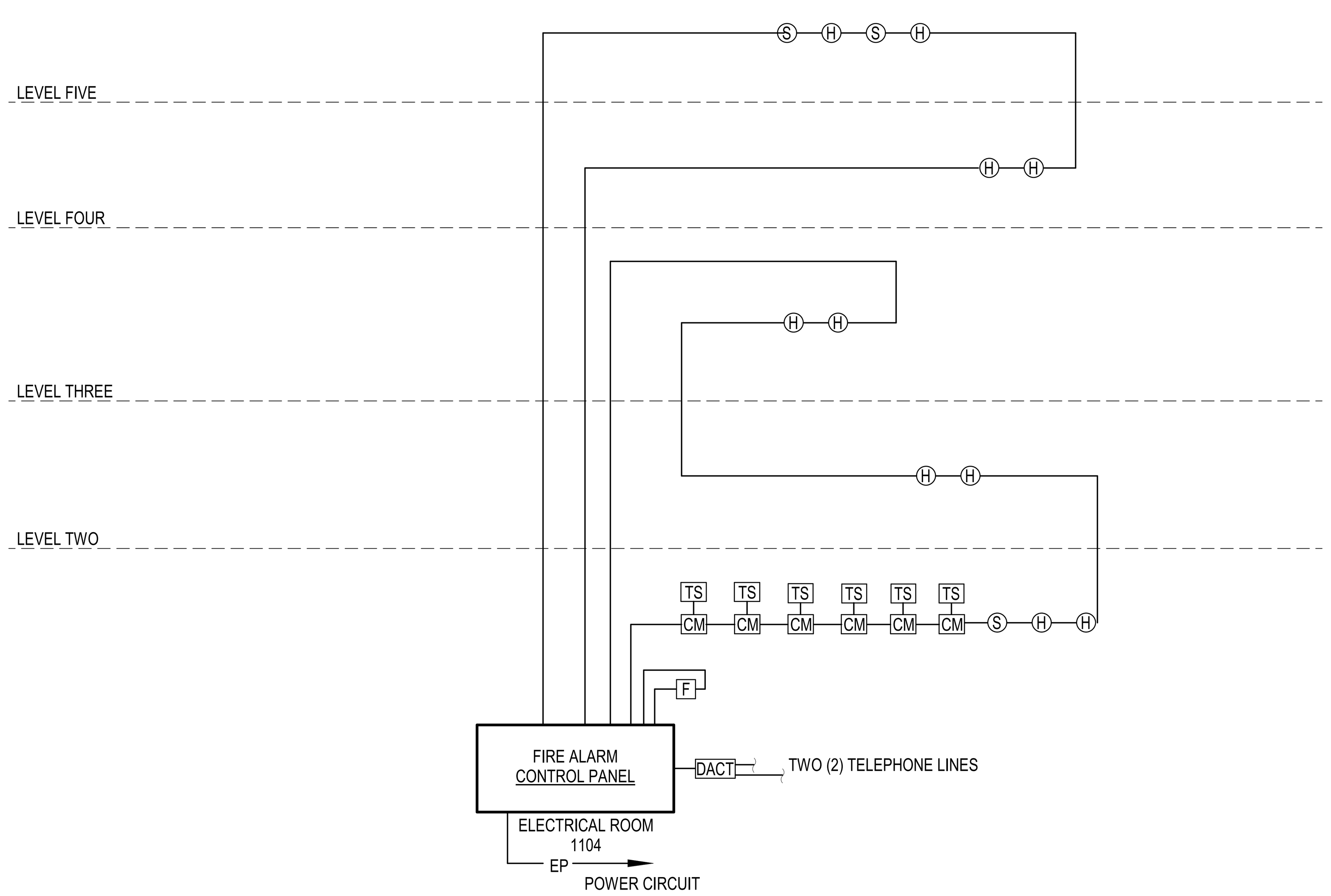

NOTES:

1. COORDINATE WITH SPRINKLER CONTRACTOR FOR QUANTITY OF FLOW AND TAMPER SWITCH MONITORING POINTS AND THEIR EXACT LOCATION.
2. RISER DIAGRAM IS FOR REFERENCE ONLY. DEVICE LOCATIONS AND QUANTITIES SHALL BE AS SHOWN ON THE FLOOR PLANS.

2 DEDICATED FUNCTION FIRE ALARM SYSTEM RISER DIAGRAM
NO SCALE

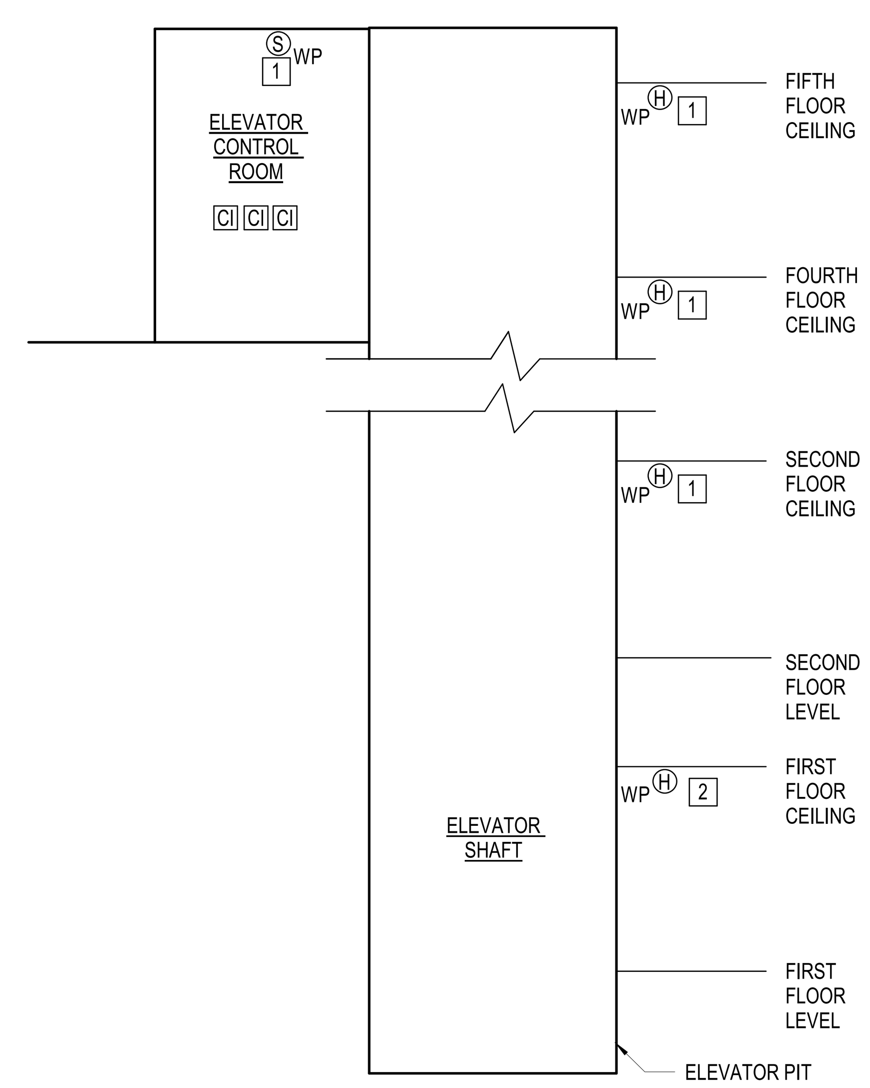

ELEVATOR NOTES

1. DETECTOR FOR PRIMARY FLOOR RECALL.
2. DETECTOR FOR ALTERNATE FLOOR RECALL.

3 ELEVATOR FIRE PROTECTION DIAGRAM
NO SCALE

4/15/2019 1:07:19 PM
C:\Revit Projects\8112_UNCW_Parking_Deck_II_F17_kcrane@clarknexsen.com.rvt

UNCW®
UNIVERSITY of NORTH CAROLINA WILMINGTON
601 S COLLEGE ROAD
WILMINGTON, NORTH CAROLINA 28403

PARKING DECK II AND SURFACE PARKING (DESIGN-BUILD)
SOUTH CAMPUS - 4965 RIEGEL ROAD

SCO ID NUMBER: 18-19226-01A
CODE: 41828
ITEM: 301

CONTRACTOR
Balfour Beatty Construction

DESIGNER
CLARKNEXSEN
1523 ELIZABETH AVENUE, SUITE 300
CHARLOTTE, NORTH CAROLINA 28204
704·377·8800
CLARK NEXSEN LICENSE NUMBER: C-1028

WALKER CONSULTANTS
13860 Ballantyne Corporate Place
Suite 140
Charlotte, NC 28277
T: 704.247.6230
www.walkerconsultants.com
NC License No. F-0518

McKIM&CREED
CIVIL ENGINEER
243 NORTH FRONT STREET
WILMINGTON, NORTH CAROLINA
28401
910.343.1048

PROFESSIONAL SEAL
NOT FOR CONSTRUCTION
NORTH CAROLINA CERT NO. 50680
NORTH CAROLINA PROFESSIONAL SEAL 041524 ENGINEER
NC CORPORATE ENGINEERING LICENSE #C-1028

SUBMITTAL
04/15/2019
CONSTRUCTION DOCUMENT SUBMITTAL 01

REVISIONS

KEY PLAN

SHEET
FIRE ALARM LEGEND NOTES AND DETAILS

FA001

DESIGN: Designer
DRAWN: Author
REVIEW: Checker

CN 8112

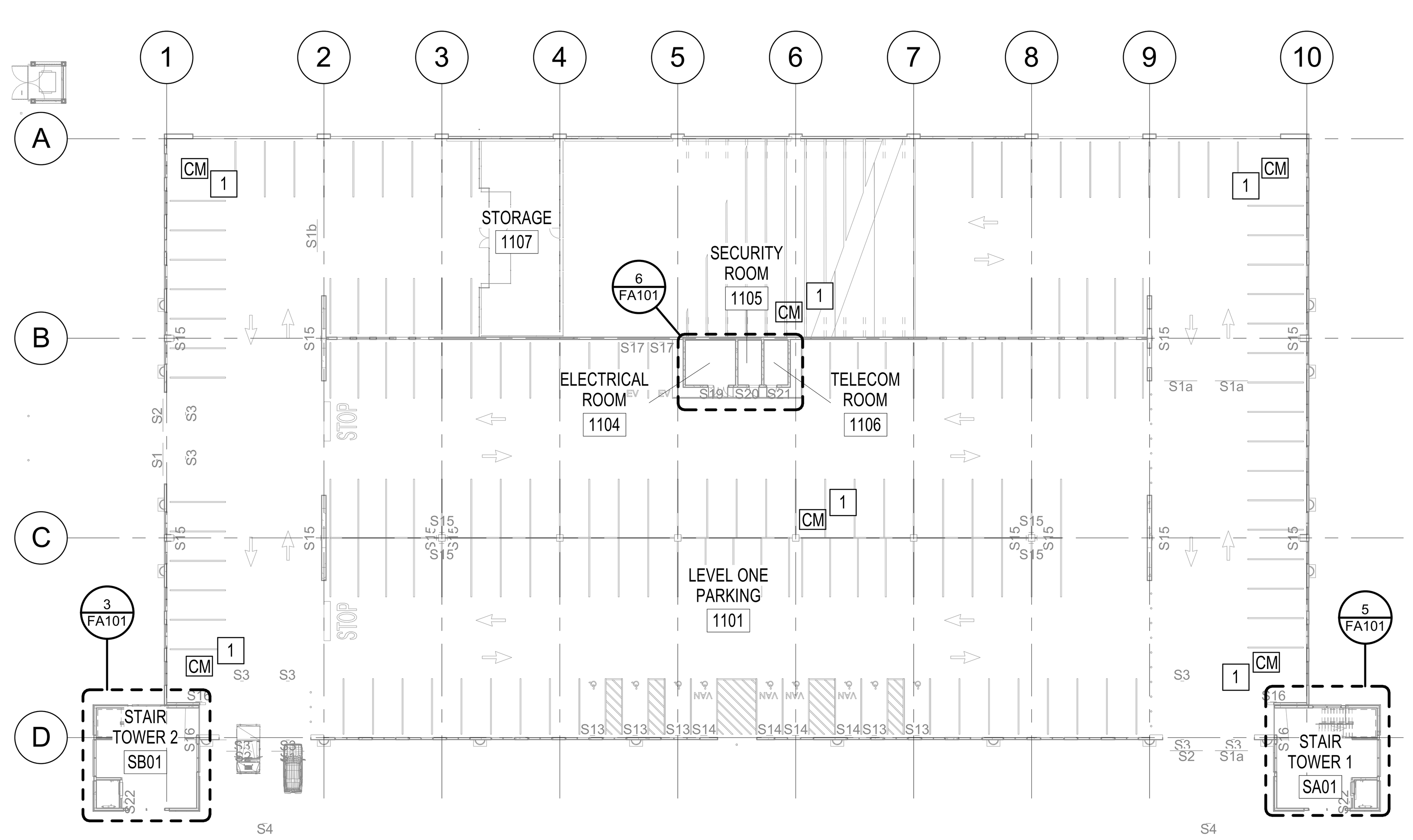

1 FIRST LEVEL
1/32" = 1'-0"

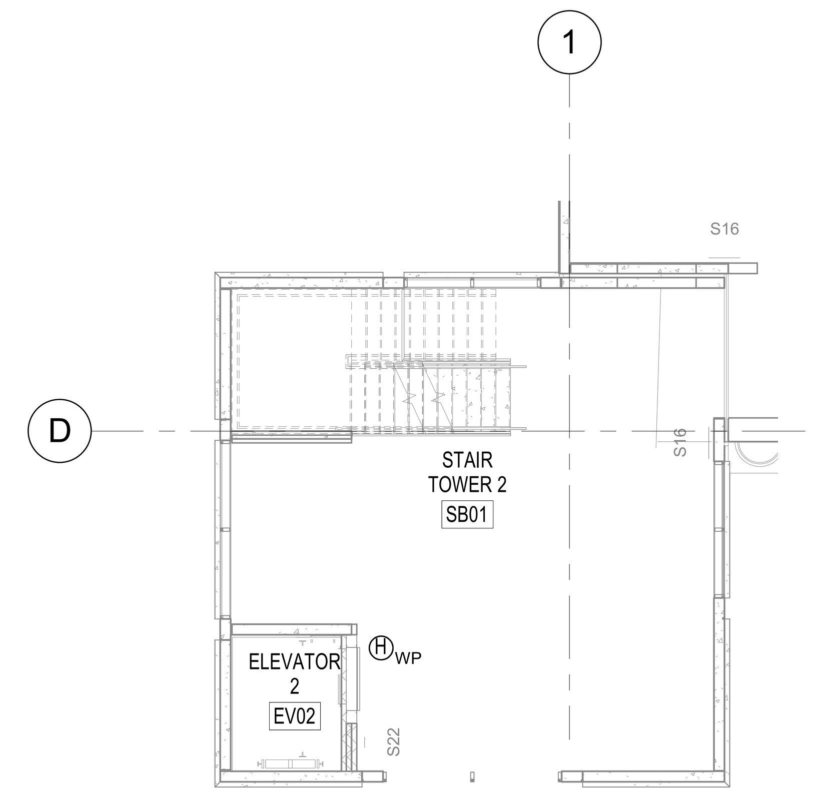

3 FIRST LEVEL - WEST STAIR
1/8" = 1'-0"

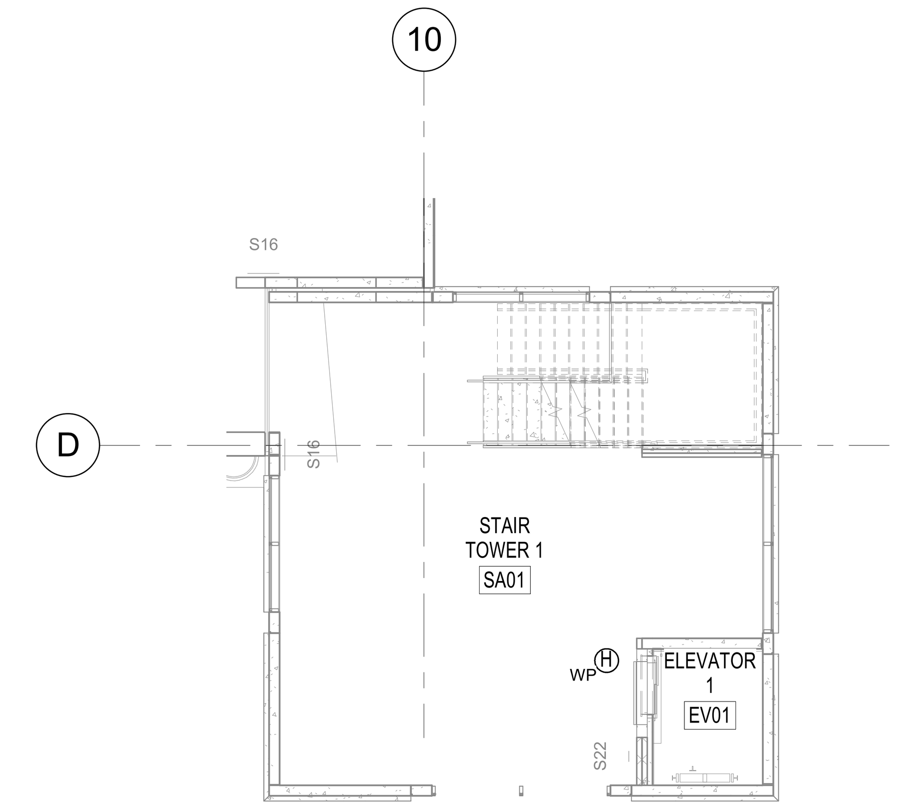

5 FIRST LEVEL - EAST STAIR
1/8" = 1'-0"

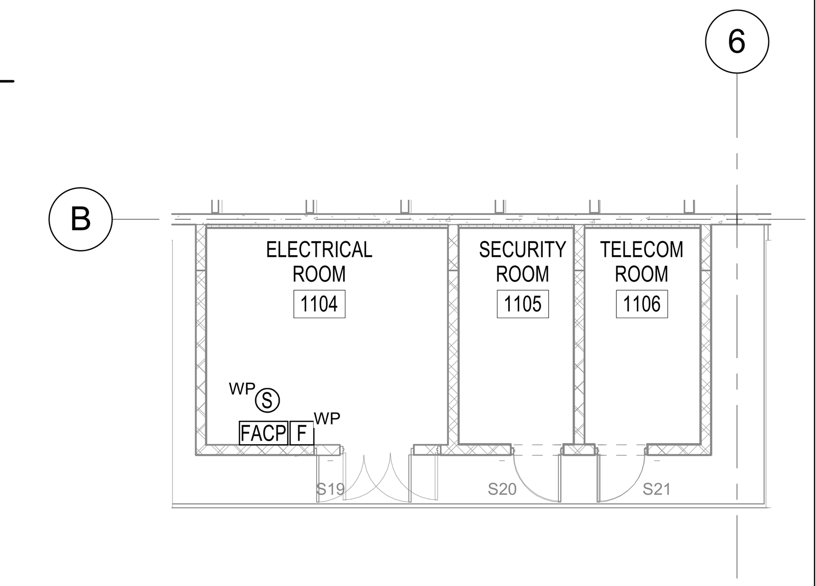

6 FIRST LEVEL ELECTRICAL ROOM
1/8" = 1'-0"

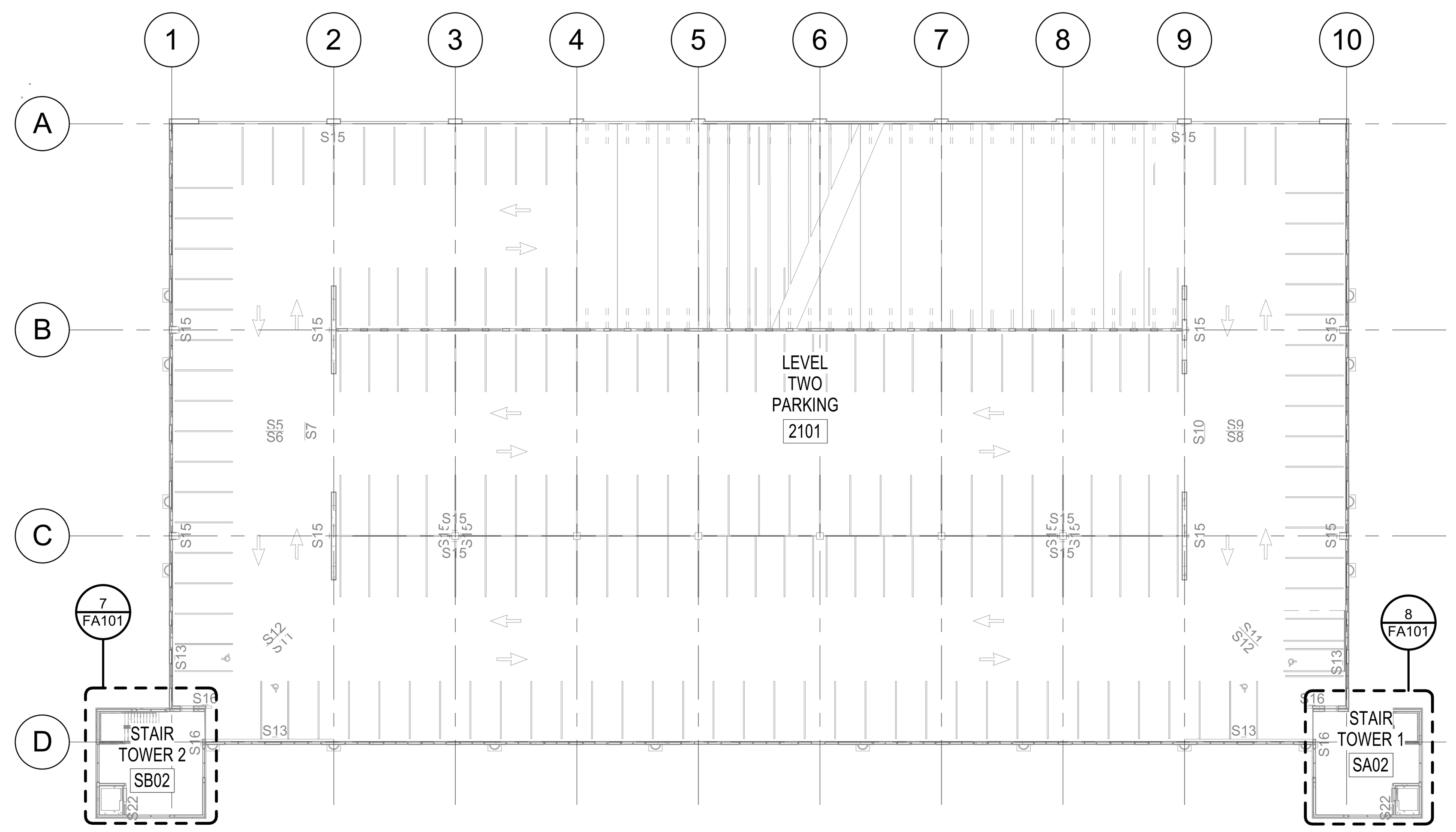

4 SECOND THROUGH FOURTH LEVELS
1/32" = 1'-0"

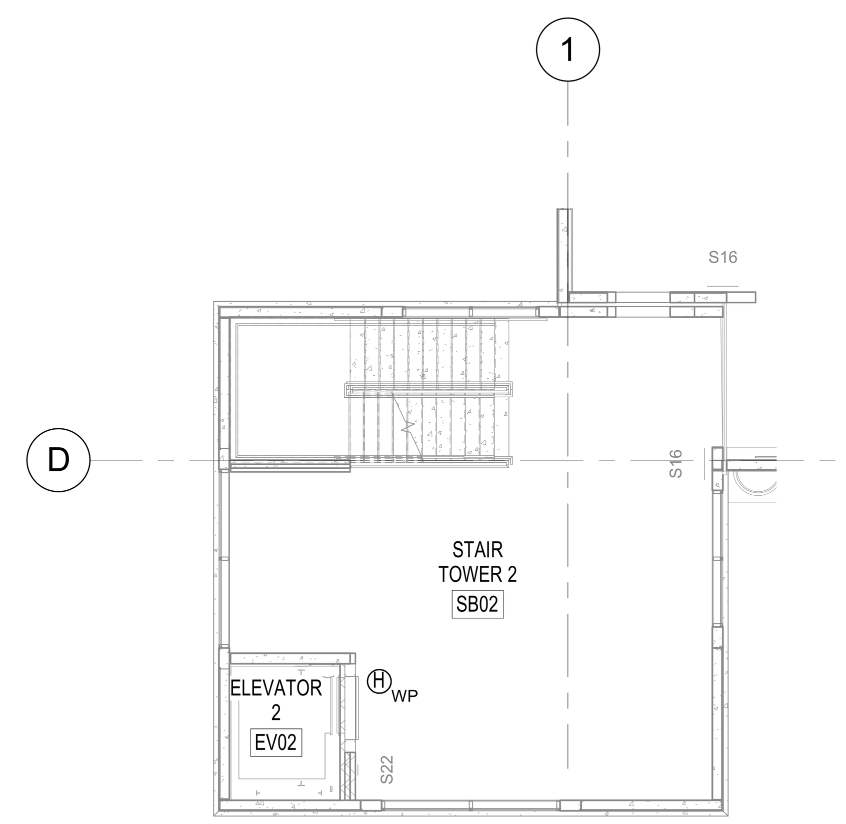

7 WEST STAIR
1/8" = 1'-0"

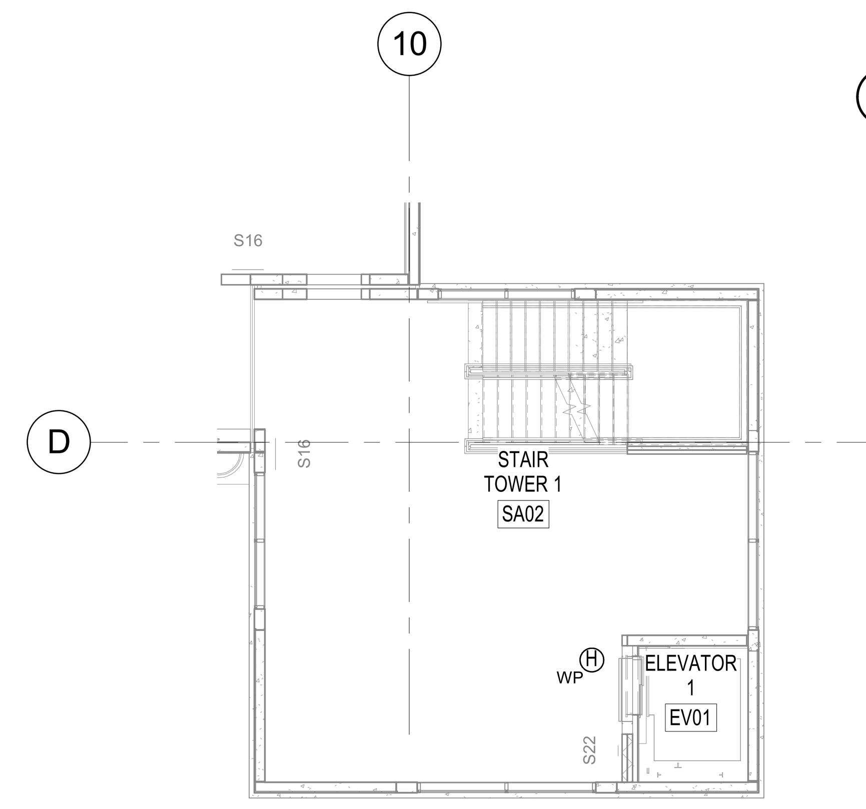

8 EAST STAIR
1/8" = 1'-0"

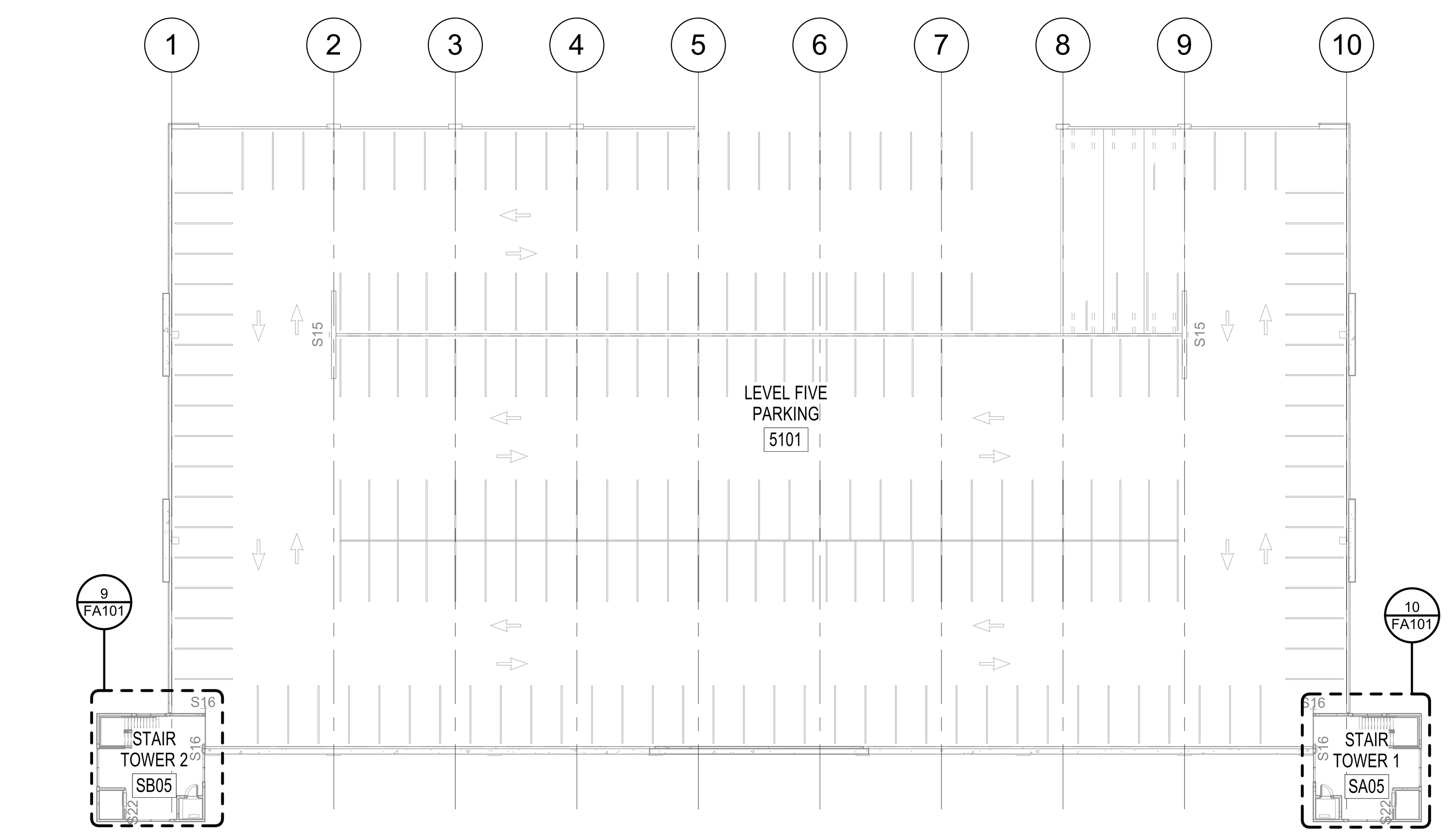

2 FIFTH LEVEL
1/32" = 1'-0"

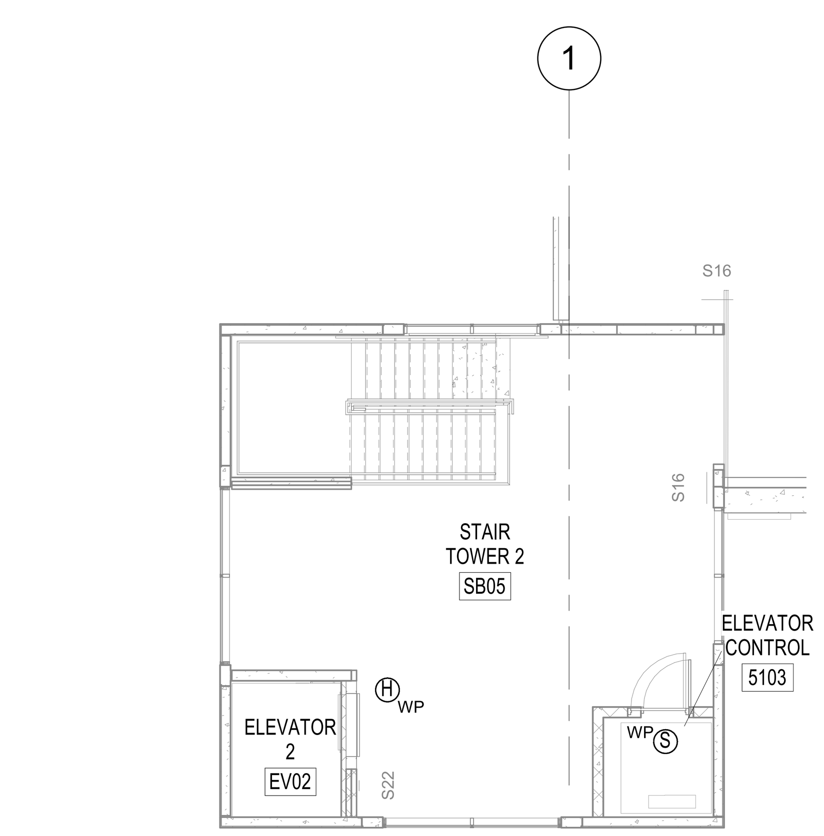

9 FIFTH LEVEL - WEST STAIR
1/8" = 1'-0"

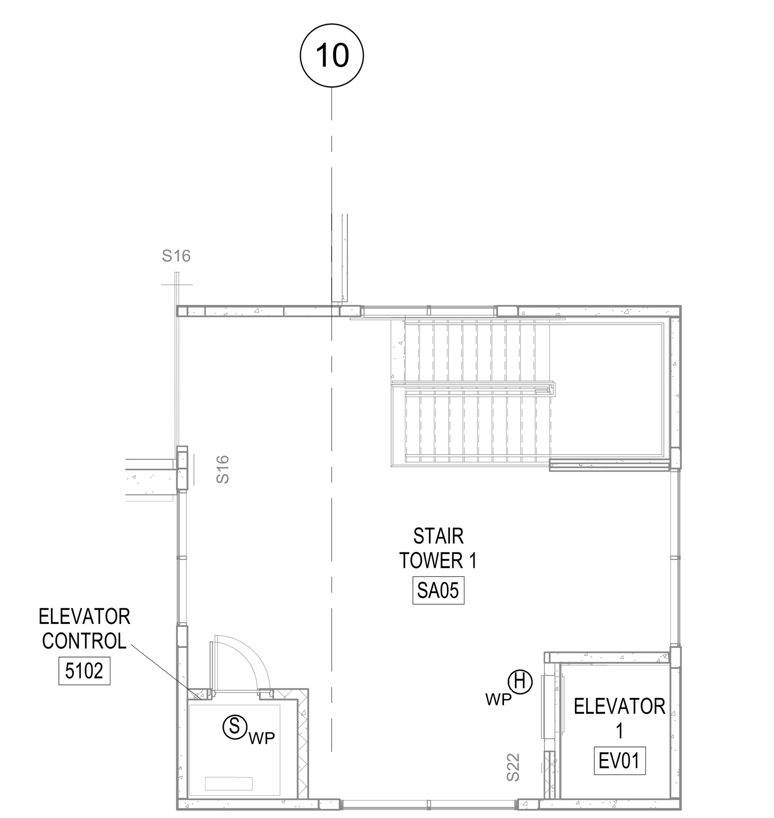

10 FIFTH LEVEL - EAST STAIR
1/8" = 1'-0"

KEY NOTES

1. CONTACT MONITOR MODULE FOR STANDPIPE ISOLATION VALVE TAMPER SWITCH MONITORING. SEE FP SERIES SHEETS FOR COORDINATION.

GRAPHIC SCALE(S)

3/128" = 1' - 0" — 0, 10', 20', 40', 80', 160'

1/8" = 1' - 0" — 0, 5', 10', 15', 30'

UNCW
UNIVERSITY of NORTH CAROLINA WILMINGTON
601 S COLLEGE ROAD
WILMINGTON, NORTH CAROLINA 28403

PARKING DECK II AND SURFACE PARKING (DESIGN-BUILD)
SOUTH CAMPUS - 4965 RIEGEL ROAD

SCO ID NUMBER: 18-19226-01A
CODE: 41828
ITEM: 301

CONTRACTOR
Balfour Beatty Construction

DESIGNER
CLARKNEXSEN
1523 ELIZABETH AVENUE, SUITE 300
CHARLOTTE, NORTH CAROLINA 28204
704·377·8800
CLARK NEXSEN LICENSE NUMBER: C-1028

WALKER CONSULTANTS
13860 Ballantyne Corporate Place
Suite 140
Charlotte, NC 28277
T: 704.247.6230
www.walkerconsultants.com
NC License No. F-0518

McKIM&CREED
CIVIL ENGINEER
243 NORTH FRONT STREET
WILMINGTON, NORTH CAROLINA
28401
910.343.1048

PROFESSIONAL SEAL
NOT FOR CONSTRUCTION
NC CORPORATE ENGINEERING LICENSE #C-1028

SUBMITTAL
04/15/2019
CONSTRUCTION DOCUMENT SUBMITTAL 01

REVISIONS

KEY PLAN

SHEET
FIRE ALARM FLOOR PLANS

FA101

DESIGN: Designer
DRAWN: Author
REVIEW: Checker

CN 8112

4/15/2019 1:07:22 PM
C:\Revit Projects\8112_UNCW_Parking_Deck_II_F17_kcrane@clarknexsen.com.rvt